# uaGate SI

## Gateway for OPC UA and MQTT Communication Upgrade of Siemens Retrofit Plants

- **Integration of Modern OPC UA Communication Functionality**
- **Easy Integration with Siemens PLCs**
- **Usage of High Security Standards for Protecting Transferred Data**


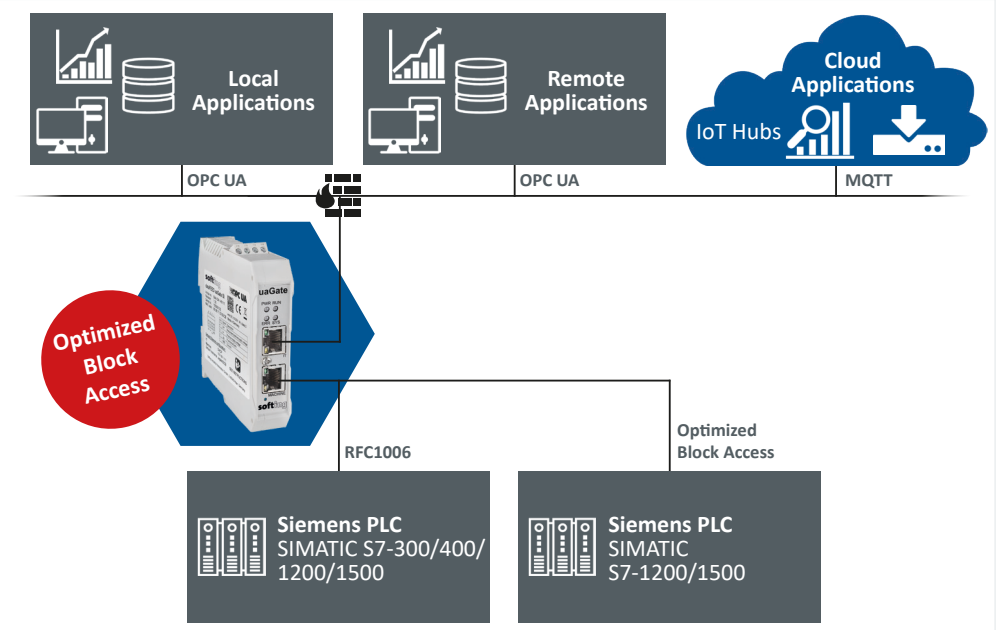


### Access to Siemens PLC Data from OPC UA Applications

- Access to SIMATIC S7-300, S7-400, S7-1200 and S7-1500 controllers
- Support of optimized data blocks in SIMATIC S7-1200 and S7-1500 controllers
- Integration of higher-level management systems like ERP, MES or SCADA using integrated OPC UA Server providing open, platform-independent and market-proven communication
- Easy local and global access to field data and routing through firewalls
- Especially dedicated to retrofit upgrades, thus protecting former investments
- No need for software updates, operating system patches and PC updates resulting in years of failure-free operation
- No PLC programming or dedicated PC required

### Optimized for Siemens Integration

- Symbolic name import from Siemens TIA Portal and SIMATIC STEP 7 projects
- Namespace configuration by browsing of SIMATIC S7 1200/1500 variables
- Easy setup of OPC UA Server requiring only a few steps for accessing Siemens PLC data
- Web interface for gateway configuration

### Industry-proven Security

- Physically separated interfaces and separate configuration rights for OT and IT networks preventing intrusions
- Supporting security standards as SSL/TLS and X.509 certificates
- OPC UA compliant data encryption and user authentification
- Security supported for MQTT communication with private and public clouds

optimize!

# uaGate SI

## Technical Data

| | | |
|---|---|---|
| **Hardware** | Processor | Altera Cyclone V SoC with Dual-core ARM Cortex-A9 |
| | Connectors | 2 x IEEE 802.3 100BASE-TX/10BASE-T (independent interfaces) |
| | Status LEDs | PWR (power supply), RUN (running), ERR (error), SYS (configuration) |
| | Dimensions (H x W x D) | 100 mm x 22.5 mm x 105 mm |
| | Power Supply | 18 VDC ... 32 VDC, SELV/PELV supply mandatory<br>Typically 200 mA, maximum 1 A at switch-on |
| | Operating Temperature, Horizontal DIN Rail Installation | -40 °C ... 50 °C (0 mm minimum distance)<br>-40 °C ... 55 °C (22.5 mm minimum distance) |
| | Operating Temperature, Vertical DIN Rail Installation | -40 °C ... 35 °C (0 mm minimum distance)<br>-40 °C ... 40 °C (22.5 mm minimum distance) |
| | Storage Temperature | -40 °C ... 85 °C |
| | Relative Humidity | 10 % ... 90 %, non-condensing |
| | Weight | About 0.2 kg |
| | Mounting | DIN Rail (35 mm) |
| | Housing | Phoenix Contact ME MAX |
| | Protection Class | IP20 |
| **Software** | Protocols | SIMATIC S7, OPC UA (Server, 20,000 items in total), MQTT (Publisher, up to 1,000 topics) |
| | Supported Controllers | Siemens SIMATIC S7-300/400, SIMATIC S7-1200/1500 (including optimized block access),<br>Siemens-compatible controllers like VIPA controllers |
| | Supported Engineering Tools | SIMATIC STEP 7, TIA-Portal V13/V14/V15 including Service Packs |
| **Conformity** | Emission | EC Directive 2004/108/EC “Electromagnetic Compatibility”, EN 55011, Group 1, Class A<br>EC Directive 2004/108/EC “Electromagnetic Compatibility”, EN 55022, Class A<br>EC Directive 2004/108/EC “Electromagnetic Compatibility”, EN 61000, Part 6-4<br>FCC CFR45, Part 15 Section 15.107 and 15.109 (Class A),<br>VCCI Class A Information Technology Equipment 2002 |
| | Immunity | EC Directive 2004/108/EC “Electromagnetic Compatibility”, EN 61000, Part 6-2 |
| **Certifications** | CE, FCC, RoHS | |

## Scope of Delivery

| | |
|---|---|
| Hardware | uaGate SI |
| Software | Tool for configuration over integrated web interface |
| Documentation | Quick Startup Guide (printed documentation) |

## Order Numbers

| | |
|---|---|
| GAA-DX-145111 | uaGate SI |

Your local Softing contact:

**https://data-intelligence.softing.com/**

optimize!
softing

# uaGate 840D

## OPC UA Server Gateway for Siemens SINUMERIK 840D sl/pl Controllers

- **Data Collection From Siemens SINUMERIK Controllers for Condition Monitoring**
- **Further Data Processing in Applications via OPC UA or MQTT Interface**
- **Easy and Secure OPC UA Retrofit for Existing and New Numeric Controllers**


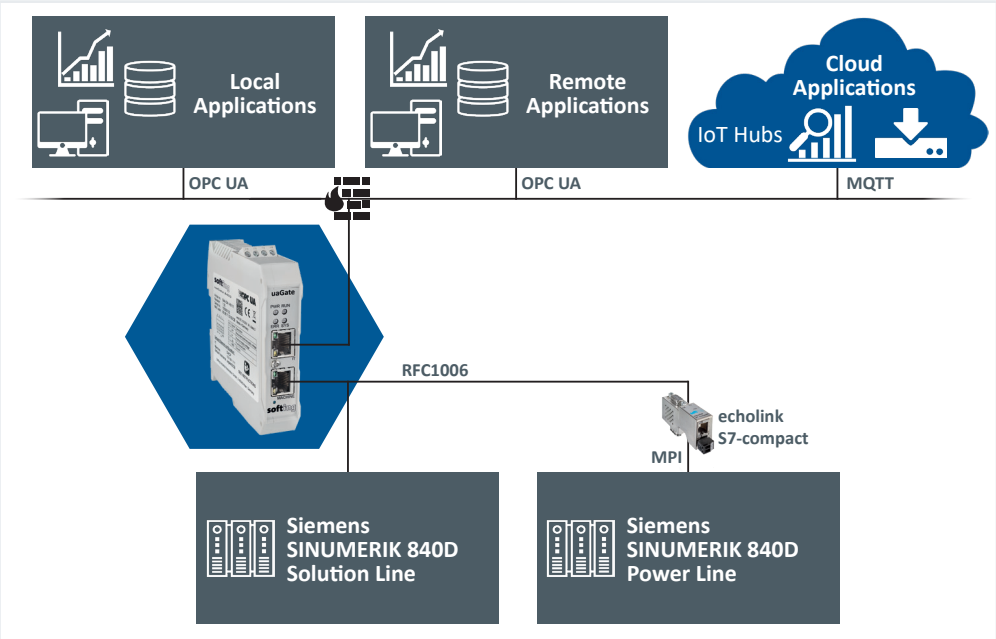


### Access to Data in PLC, NC and Drives Area of Siemens SINUMERIK 840D sl/pl

- Access to many different Siemens SINUMERIK 840D Solution Line and Power Line controllers
- Data integration into higher level management tools like ERP, MES or SCADA systems
- Embedded OPC UA Server providing open, platform-independent communication
- Access to NC area containing axis, tool, program, drive data and specific alarms
- Use of data for analysis, condition monitoring, predictive maintenance or data logging purposes
- No additional Siemens licenses necessary
- Initial configuration without requiring PLC or NC programming

### Easy Configuration

- Usage of predefined symbol files for standard configurations for easy comissioning
- Upload of AWL file created from user-defined NCVar Selector symbol files for NCK connection
- Easy symbol import from SIMATIC STEP 7/TIA Portal projects for S7 PLC connection
- Gateway configuration using integrated web server and standard web browser

### Industry-proven Security

- Physically separated Ethernet interfaces protecting SINUMERIK from unauthorized access via IT network
- Support of security standards like SSL/TLS, X.509 certificates and user authentication for OPC UA and MQTT communication

optimize!

# uaGate 840D

## Technical Data

| | | |
|---|---|---|
| **Hardware** | Processor | Altera Cyclone V SoC with Dual-core ARM Cortex-A9 |
| | Connectors | 2 x IEEE 802.3 100BASE-TX/10BASE-T (independent interfaces) |
| | Status LEDs | PWR (power supply), RUN (running), ERR (error), SYS (configuration) |
| | Dimensions (H x W x D) | 100 mm x 22.5 mm x 105 mm |
| | Power Supply | 18 VDC ... 32 VDC, SELV/PELV supply mandatory<br>Typically 200 mA, maximum 1 A at switch-on |
| | Operating Temperature, Horizontal DIN Rail Installation | -40 °C ... 50 °C (0 mm minimum distance)<br>-40 °C ... 55 °C (22.5 mm minimum distance) |
| | Operating Temperature, Vertical DIN Rail Installation | -40 °C ... 35 °C (0 mm minimum distance)<br>-40 °C ... 40 °C (22.5 mm minimum distance) |
| | Storage Temperature | -40 °C ... 85 °C |
| | Relative Humidity | 10 % ... 90 %, non-condensing |
| | Weight | About 0.2 kg |
| | Mounting | DIN Rail (35 mm) |
| | Housing | Phoenix Contact ME MAX |
| | Protection Class | IP20 |
| **Software** | Protocols | SIMATIC S7, RFC1006, SINUMERIK, OPC UA (Server, 20,000 items in total),<br>MQTT (Publisher, up to 1,000 topics) |
| | Supported Controllers | Siemens SINUMERIK 840D Solution Line, software version V2.7 and higher<br>Siemens SINUMERIK 840D Power Line, software version V5.3 and higher<br>(other on request) |
| | Supported Engineering Tools | Siemens NCVar Selector |
| **Conformity** | Emission | EC Directive 2004/108/EC “Electromagnetic Compatibility”, EN 55011, Group 1, Class A<br>EC Directive 2004/108/EC “Electromagnetic Compatibility”, EN 55022, Class A<br>EC Directive 2004/108/EC “Electromagnetic Compatibility”, EN 61000, Part 6-4<br>FCC CFR45, Part 15 Section 15.107 and 15.109 (Class A),<br>VCCI Class A Information Technology Equipment 2002 |
| | Immunity | EC Directive 2004/108/EC “Electromagnetic Compatibility”, EN 61000, Part 6-2 |
| **Certifications** | CE, FCC, RoHS | |

## Scope of Delivery

| | |
|---|---|
| Hardware | uaGate 840D |
| Software | Tool for configuration over integrated web interface |
| Documentation | Quick Startup Guide (printed documentation) |

## Order Numbers

| | |
|---|---|
| GAA-YX-145144 | uaGate 840D |

## Additional Products and Services

| | |
|---|---|
| 6FC5851-1XC45-4YA8 | SINUMERIK 840D sl CNC software and SINUMERIK Operate, toolbox including NCVar Selector<br>(please order directly from Siemens) |
| GPL-CS-191000 | echolink S7-compact (PROFIBUS/MPI adapter for communication with SINUMERIK 840D pl) |

Your local Softing contact:

**https://data-intelligence.softing.com/**

optimize!
softing

# epGate PN

## EtherNet/IP to PROFINET Gateway with PROFINET Controller Functionality

- **Direct exchange of process data between EtherNet/IP and PROFINET networks**
- **Easy data access to Rockwell Engineering Software**
- **Time Saving Configuration and Verification as well as Monitoring and Interaction**


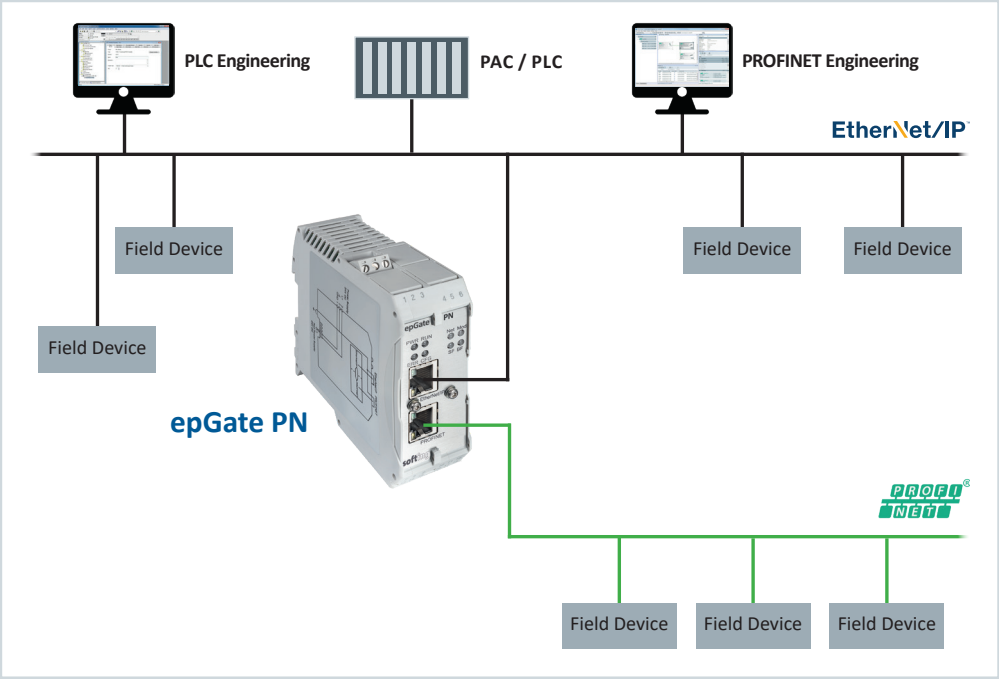


### Reliable Operation Across Networks Boundaries

- Connection to the EtherNet/IP network via the so-called adapter (slave); (upper RJ45 socket)
- PROFINET controller (Master) functionality (lower RJ45 socket)
- Direct access from EtherNet/IP scanner in the PLC to PROFINET field devices
- Access to machines with internal PROFINET network by deploying I-Device capabilities (Support of Siemens PLCs)
- Transparent exchange of I/O data
- EtherNet/IP side is informed about PROFINET faults and diagnostics
- EtherNet/IP PLC can activate PROFINET outputs explicitely by a quality value
- PROFINET outputs switch to safe state if connection to the PLC is lost

### Simple Integration Through Add-On Instructions

- Data access of PLC program to PROFINET devices without requiring detailed PROFINET knowledge
- Mapping between the two protocols generated by provided tools
- Use of Add-On Instructions (AOI) containing detailed PROFINET data type definitions
- Transparent communication overcoming protocol differences

### Including configuration tool and integrated web server

- PC-based configuration software for online access to PROFINET Devices with ready to use symbolic mapping information for the EtheNet/IP PLC's engineering software
- Built-In web server for monitoring of mapping as well as of exchanged data

optimize!

# epGate PN

## Technical Data

| | | |
|---|---|---|
| **Hardware** | Processor | Altera Cyclone V SoC with Dual-core ARM Cortex-A9 |
| | Status LEDs (Gateway) | PWR (power supply), RUN (operation), ERR (error), CFG (configuration) |
| | Status LEDs (EtherNet/IP) | Net (network), Mod (module) |
| | Status LEDs (PROFINET) | SF (system fault), BF (bus fault) |
| **Connectors** | Ethernet | 2 x IEEE 802.3 100BASE-TX/10BASE-T (1 Ethernet port per protocol) |
| **Physical Properties** | Dimensions (H x W x D) | 100 mm x 35 mm x 105 mm |
| | Weight | Approx. 0.25 kg |
| | Power Supply | 18 VDC ... 32 VDC; SELV/PELV power supply mandatory. Typically 200 mA, maximum 1 A at switch-on |
| | Operating Temperature, Horizontal DIN Rail | -40 °C ... 55 °C (0 mm minimum distance)<br>-40 °C ... 65 °C (17.5 mm minimum distance) |
| | Operating Temperature, Vertical DIN Rail | -40 °C ... 40 °C (0 mm minimum distance)<br>-40 °C ... 50 °C (17.5 mm minimum distance) |
| | Storage Temperature | -40 °C ... 85 °C |
| | Relative Humidity | 10 % ... 90 %, non condensing |
| | Cooling | Convection, no fan |
| | Mounting | DIN Rail (35 mm) |
| | Housing Type | Phoenix Contact ME MAX 35 mm |
| | Protection Class | IP20 |
| **Software** | Protocols | EtherNet/IP Adapter:<br>up to 2 Input Assemblies and 2 Output Assemblies with up to 255 Bytes data each, min. RPI: 2 ms<br>PROFINET Controller<br>support for up to 16 (standard) or 32 (optional) PROFINET devices, down to 250µs cycle time |
| | Additional Functionality | Mapping application, web server |
| | Verified with | Rockwell Automation PLC Programming Software: V19, V24, V30 |
| **Conformity** | EMC directive 2014/30/EU | Applied harmonised standards:<br>EN 55011 Industrial, scientific and medical (ISM) devices - radio disturbance - limits and methods of measurement<br>EN 55032 Electromagnetic compatibility of multimedia equipment (MME) and interference emission<br>EN 61000-6-4 Electromagnetic compatibility (EMC); Part 6-4: generic standard - emission for industrial environments<br>EN 61000-6-2 Electromagnetic compatibility (EMC); Part 6-2: generic standard - immunity for industrial environments |
| | ROHS directive 2011/165/EU | A Declaration of Conformity in compliance with the above standards has been made and can be requested from Softing Industrial Automation GmbH. |
| | FCC | This equipment has been tested and found to comply with the limits for a Class A digital device, under part 15 of the FCC Rules. |
| | VCCI | This Class A product conforms to the regulations of Voluntary Control Council for Interference (VCCI) by Information Technology Equipment. |

## Scope of Delivery

| | |
|---|---|
| Hardware | epGate PN Gateway |
| Software | EDS file, tools for discovery and configuration on website |
| Documentation | On website |

## Order Numbers

| | |
|---|---|
| GCA-CA-014111 | **epGate PN**, EtherNet/IP to PROFINET Gateway |
| LRA-CA-019390 | epGate PN extension by 16 to a total of 32 supported PROFINET devices |

Your local Softing contact:

**http://industrial.softing.com**

optimize!
softing

# epGate DP

## Simple connection of PROFIBUS DP Slave Devices to EtherNet/IP Control Systems via Internal I/O Mapping

- **Prepared for Integration in Standard Engineering and Plant Asset Management Tools**
- **Compatible with Products of Leading PLC Manufacturers**
- **Fast Configuration of Device Mapping via Built in Web Interface**
- **Simple Integration Through Add-On Instructions**


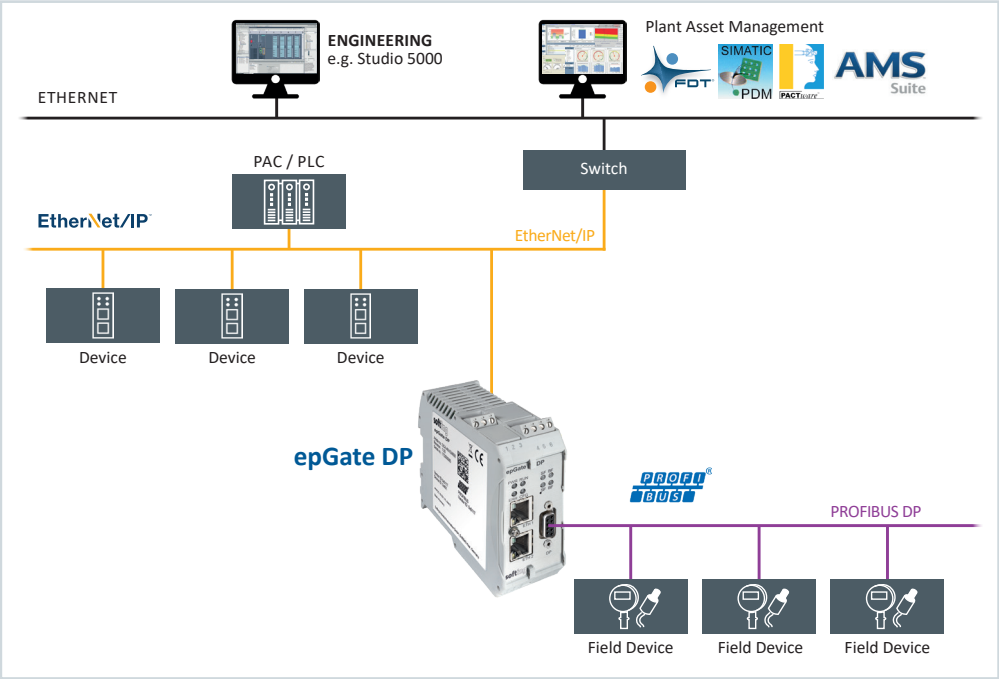


### Configuration, Parameterization and Plant Asset Management Using Standard Industry Tools

- Supports major EtherNet/IP engineering tools such as Studio 5000 and AMS Device Manager
- Included CommDTM allowing use in FDT/DTM frame applications
- EDD-based device parametrization using Siemens Simatic PDM

### Key Component for Transition to State-of-the-Art Technology

- Re-use of existing PROFIBUS segments without requiring modification
- Support of common control systems e.g. Emerson DetlaV or Rockwell Control Logix
- Support of DLR for redundant communication in the ring with EtherNet/IP

### Direct Connectivity to PROFIBUS Segments

- Single access point to PROFIBUS DP segment from EtherNet/IP networks
- Acting as EtherNet/IP device (adapter) and PROFIBUS DP master
- Support of one PROFIBUS DP segment

### Simple Integration Through Add-On Instructions

- Data access of PLC program to PROFIBUS devices without requiring detailed PROFIBUS knowledge
- Mapping between the two protocols generated by provided tools
- Use of Add-On Instructions (AOI) containing detailed PROFIBUS data type definitions
- Transparent communication overcoming protocol differences
- Optimized for usage with Allen Bradley controllers

optimize!

# epGate DP

## Technical Data

| | | |
|---|---|---|
| **Hardware** | Processor | Altera Cyclone V SoC with dual-core ARM Cortex-A9 |
| | Status LEDs (Gateway) | PWR (power supply), RUN (operation), ERR (error), CFG (configuration and update) |
| | Status LEDs (Fieldbus) | SF (system fault), BF (bus fault) |
| **Interfaces and Connectors** | Ethernet | 2 * IEEE 802.3 100BASE-TX / 10BASE-T, managed Ethernet switch for daisy chain totpology<br>Connectors: RJ45<br>Protocol: EtherNet/IP<br>RESTful API interface for device configuration |
| | PROFIBUS DP-V0 / V1 | 1 Segment with RS485 Physical Layer, Connector: 9-pin Sub-D socket |
| **Physical Properties** | Dimensions (H x W x D) | 100 mm x 35 mm x 115 mm |
| | Weight | Approx. 0.25 kg |
| | Power Supply | 18 VDC ... 32 VDC; SELV/PELV power supply mandatory<br>Typical input current: 200 mA, maximum input current: 1 A (allowing for in-rush current at switch-on) |
| | Typical Power Loss | 5 W |
| | Operating / Storage Temperature | -40 °C ... +60 °C / -40 °C ... +85 °C<br>(see detailed mounting description in user manual) |
| | Relative Humidity | 10 % ... 95 %, non-condensing |
| | Cooling | Convection, no fan |
| | Coating | Conformal coating based on ANSI / ISA-S71.04 G3 |
| | Mounting | DIN rail 35 mm |
| | Protection Class | IP20 |

## Scope of Delivery

| | |
|---|---|
| Hardware | epGate DP Gateway |
| Documentation | On Website |

## Order Numbers

| | |
|---|---|
| GCA-CN-024706 | **epGate DP**, EtherNet/IP to PROFIBUS DP Gateway. Supports **1 PROFIBUS DP segment** (RS485). |

## Additional Products and Services

| | |
|---|---|
| LRL-DY-134501 | **dataFEED OPC Suite**, Version 4.01 and higher, including all supported PLC protocols, support for OPC UA, access for any number of dataFEED OPC Tunnel Clients, for simultaneous access to a total of up to 100 OPC UA Servers, OPC Servers and OPC Tunnel Servers, and many more Functionalities such as Database and File Access, Data Exchange, Optimizer, Concentrator and Bridge |
| GCA-CN-024708 | **epGate PB**, EtherNet/IP to PROFIBUS gateway. Supports **2 PA segments** (up to 32 PA devices, MBP physical layer) and **1 PROFIBUS DP segment** (RS485). |
| GCA-CL-024702 | **epGate PA**, EtherNet/IP to PROFIBUS PA gateway. Supports **up to 2 PA segments** (up to 32 PA devices). |
| GCA-CL-024704 | **epGate PA**, EtherNet/IP to PROFIBUS PA gateway. Supports **up to 4 PA segments** (up to 64 PA devices). |
| GCA-CL-024705 | **epGate PA** (for STAHL carrier), EtherNet/IP to PROFIBUS PA gateway.<br>Supports **up to 4 PA segments** (up to 64 PA devices). For reverse installation position in STAHL backplane. |

Your local Softing contact:

**http://industrial.softing.com**

optimize!
softing

# pnGate PA

## Direct PROFIBUS PA Segment Integration into PROFINET Control Systems

- **Re-use of Existing Power Conditioners in Technology Upgrade Projects**
- **No PROFIBUS DP Intermediate Segment required**
- **Prepared for Integration in Standard Engineering and Plant Asset Management Tools**

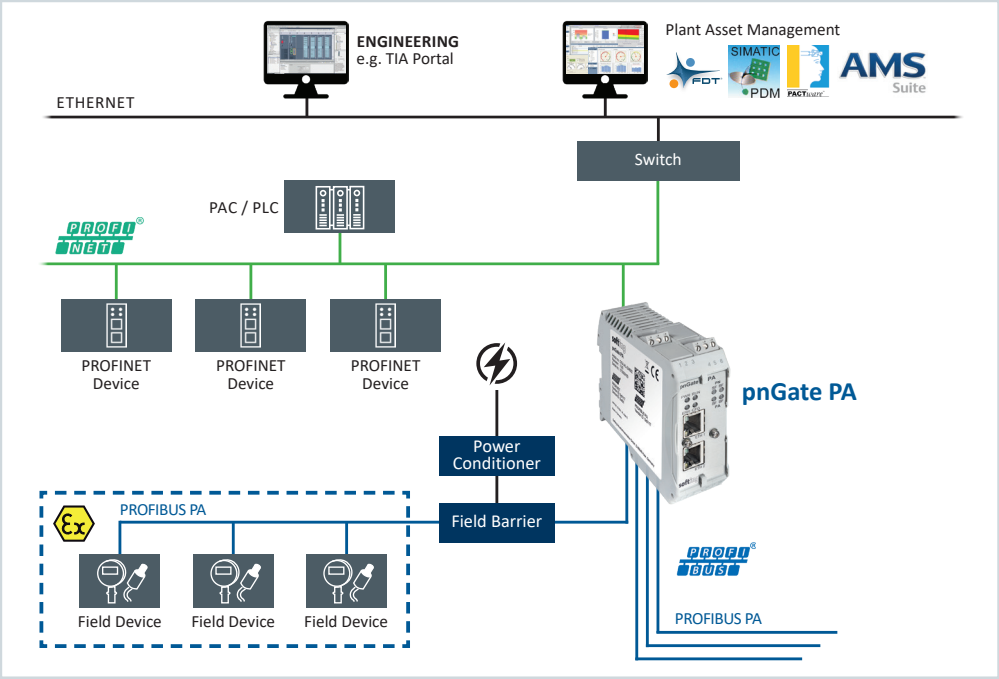


### Key Component for Transition to State-of-the-Art Technology

- Simple replacement of installed PROFIBUS DP/PA segment couplers
- Re-use of existing PROFIBUS PA segments without requiring modification
- Support of MRP and S2 PROFINET redundancy for increased reliability

### Direct Connectivity to PROFIBUS Segments

- Acting as PROFINET Device and PROFIBUS PA Master
- Support of up to 4 PROFIBUS PA segments

### Configuration, Parameterization and Plant Asset Management Using Standard Industry Tools

- Supports major PROFINET engineering tools such as TIA Portal, Step7 and PC WORXS
- Included CommDTM allowing use in FDT/DTM frame applications
- EDD-based device parametrization using Siemens Simatic PDM

optimize!

# pnGate PA

## Technical Data

| | | |
|---|---|---|
| **Hardware** | Processor | Altera Cyclone V SoC with dual-core ARM Cortex-A9 |
| | Status LEDs (Gateway) | PWR (power supply), RUN (operation), ERR (error), CFG (configuration and update) |
| | Status LEDs (Fieldbus) | SF (system fault), BF (bus fault) |
| **Interfaces and Connectors** | Ethernet | 2 * IEEE 802.3 100BASE-TX / 10BASE-T, embedded PROFINET switch for daisy chain topology<br>Connectors: RJ45<br>Protocol: PROFINET RT / IRT, Support of PROFINET redundancy protocols<br>RESTful API interface for device configuration |
| | PROFIBUS PA | Up to 4 PROFIBUS PA (MBP) segments (refer to the section “Order Numbers”),<br>Bus-powered Medium Attachment Unit (MAU): Fieldbus voltage range: 9 VDC ... 32 VDC,<br>current consumption 10 mA, Connectors: 3-position screw connection, galvanically isolated |
| **Physical Properties** | Dimensions (H x W x D) | 100 mm x 35 mm x 115 mm |
| | Weight | Approx. 0.25 kg |
| | Power Supply | 18 VDC ... 32 VDC; SELV/PELV power supply mandatory<br>Typical input current: 200 mA, maximum input current: 1 A (allowing for in-rush current at switch-on)<br>No power supply to PROFIBUS PA segments through pnGate PA |
| | Typical Power Loss | 6 W |
| | Operating / Storage Temperature | -40 °C ... +60 °C / -40 °C ... +85 °C<br>(see detailed mounting description in user manual) |
| | Relative Humidity | 10 % ... 95 %, non-condensing |
| | Cooling | Convection, no fan |
| | Coating | Conformal coating based on ANSI / ISA-S71.04 G3 |
| | Mounting | DIN rail 35 mm |
| | Protection Class | IP20 |

## Scope of Delivery

| | |
|---|---|
| Hardware | pnGate PA Gateway |
| Documentation | On Website |

## Order Numbers

| | |
|---|---|
| GCA-AL-024602 | **pnGate PA**, PROFINET to PROFIBUS-PA Gateway. **Supports up to 2 PROFIBUS PA segments** (up to 32 PA devices). |
| GCA-AL-024604 | **pnGate PA**, PROFINET to PROFIBUS-PA Gateway. **Supports up to 4 PROFIBUS PA segments** (up to 64 PA devices). |
| GCA-AL-024605 | **pnGate PA (for STAHL carrier)**, PROFINET to PROFIBUS-PA Gateway. **Supports up to 4 PROFIBUS PA segments** (up to 64 PA devices). For reversed mounting position on STAHL backplane |

## Additional Products and Services

| | |
|---|---|
| LRL-DY-134501 | **dataFEED OPC Suite**, Version 4.01 and higher, including all supported PLC protocols, support for OPC UA, access for any number of dataFEED OPC Tunnel Clients, for simultaneous access to a total of up to 100 OPC UA Servers, OPC Servers and OPC Tunnel Servers, and many more Functionalities such as Database and File Access, Data Exchange, Optimizer, Concentrator and Bridge |
| GCA-AN-024608 | **pnGate PB**, PROFINET to PROFIBUS Gateway. **Supports up to 2 PROFIBUS PA segments** (up to 32 PA devices, MBP physical layer) and 1 PROFIBUS DP segment (RS485). |

Your local Softing contact:

**http://industrial.softing.com**

optimize!
softing

# FG-200

## FF Network Integration via Modbus Including Redundancy

- **Implementation of FF advantages in Modbus host systems**
- **Usage as a redundant link**
- **Interface for Plant Asset Management applications**
- **Functionally advanced and easy-to-integrate gateway package**


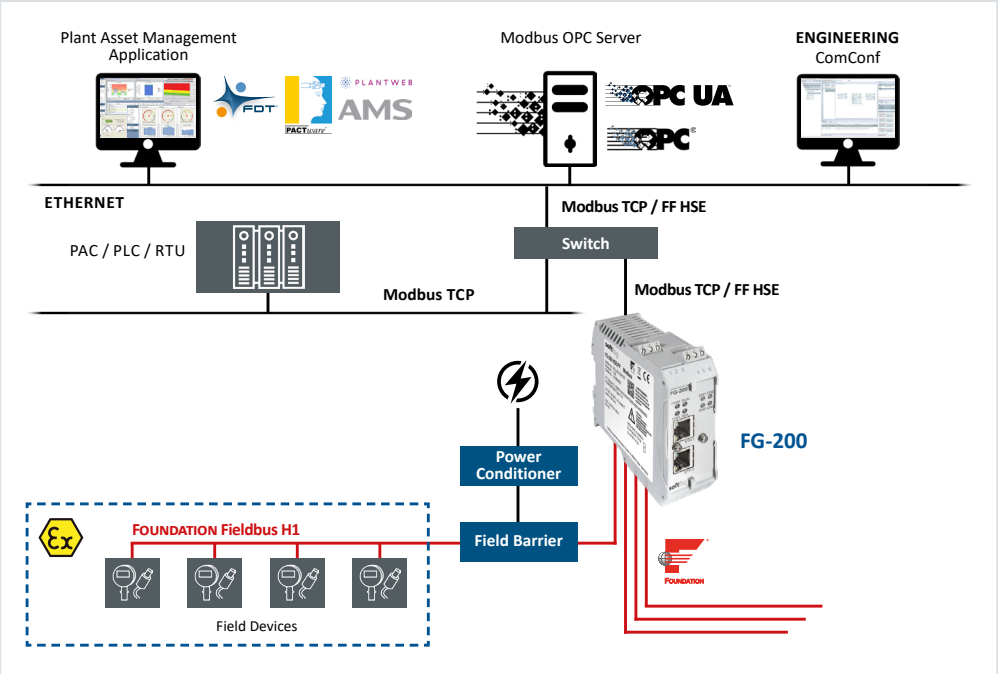


### CAPEX-efficient Integration of FF-devices into Modbus Architectures

- Parallel support of up to 4 FF-H1 channels, each for max. 16 field devices
- Fast access to process data
- Suitable for use in hazardous areas
- Easy Commissioning:
  - Optional support of R. STAHL bus-Carrier Series 9419 and Fieldbus Power Supply 9412 products (cabling reduced to a minimum)
  - Modbus data import to web server reducing mapping efforts

### Device Redundancy

- Redundancy link enabling device redundancy (D-3 according to FF-593)
- Automatic mirroring of configuration data
- Very fast redundancy switch-over

### Prepared for Plant Asset Management tasks

- Visitor mode avoiding interference with network behavior
- Enabling asset management systems (e.g. Emerson's AMS) and Field Device Tool (FDT) frame applications (e.g. SMART VISION, FieldMate, Field Device Manager, FieldCare, or PACTware)

### All Necessary Tools Included

- FF Configuration Tool for configuration of devices and cyclic communication
- PACTware for device configuration and basic asset management tasks

optimize!

# FG-200

## Technical Data

| | | |
|---|---|---|
| **Hardware** | Processor | Altera Cyclone V SoC with dual-core ARM Cortex-A9 |
| | Status LEDs (Gateway) | PWR (power supply), RUN (operation), ERR (error), RDL (redundancy link) |
| | Status LEDs (Fieldbus) | FF H1 activity per link |
| **Interfaces and Connectors** | Ethernet | 2 * IEEE 802.3 100BASE-TX / 10BASE-T (only ETH1 supported)<br>Connectors: RJ45 |
| | FUNDATION Fieldbus H1 | 4 FF H1 links, compliant to type 114 of FF physical layer profile<br>(each link capable to operate independently as Link Master and/or Time Master)<br>Transfer rate: 31.25 Kbit/s<br>Fieldbus voltage range: 9 VDC ... 32 VDC, preferred voltage: 24 VDC<br>Current consumption: 10 mA / link<br>Connectors: 3-position screw connection, galvanically isolated |
| **Physical Properties** | Dimensions (H x W x D) | 100 mm x 35 mm x 105 mm |
| | Weight | Approx. 0.25 kg |
| | Power Supply | 18 VDC ... 32 VDC; SELV/PELV power supply mandatory; Typical input current: 200 mA, maximum input current: 1 A (allowing for in-rush current at switch-on)<br>No power supply to FF H1 links through FG-200 HSE/FF Modbus |
| | Operating / Storage Temperature | -40 °C .. +70 °C / -40 °C .. +85 °C (see detailed mounting description in user manual) |
| | Relative Humidity | 10 % ... 95 %, non-condensing |
| | Cooling | Convection, no fan |
| | Coating | Conformal coating based on ANSI / ISA-S71.04 G3 |
| | Mounting | DIN rail 35 mm |
| | Protection Class | IP20 |
| **Software** | Protocols | FOUNDATION Fieldbus H1, FOUNDATION Fieldbus HSE, Modbus TCP |
| | Redundancy | Device redundancy compliant to type D-3 according to specification FF-593 |
| **Conformity / Certifications** | CE | EN61000-6-2, EN61000-6-4, EN55022 Limit Class A, EN55011 |
| | Electromagnetic Compatibility (EMC) | FCC CRF47, Part 15 Section 15.107 and 15.109 (Class A),<br>VCCI Class A Information Technology Equipment 2002 |
| | Vibration / Shock | DIN EN 60068-2-6 Vibration / DIN EN 60068-2-27 Schock |
| | Hazardous Location Certifications | cULus: Class 1, Division 2, Groups A, B, C, D (in preperation)<br>IECEx: Ex nA [ic] IIC T4 Gc<br>ATEX: II 3G nA [ic] IIC T4 Gc |

## Scope of Delivery

| | |
|---|---|
| Hardware | FG-200 |
| Software | FF Configuration Tool, FDT CommDTM, PACTware on CD-ROM |
| Documentation | Quick Startup Guide, User Manual on CD-ROM |

## Order Numbers

| | |
|---|---|
| GLA-EK-024102 | FG-200 |
| ACA-ZZ-020631 | Redundancy Link (3-pole), Cable (30 cm) for connecting redundant pairs of FG-200 |

Your local Softing contact:

**http://industrial.softing.com**

optimize!
softing

# pnGate PB

## Direct Integration of PROFIBUS DP and PA Segments into PROFINET Control Systems

- **Re-use of Existing Power Conditioners in Technology Upgrade Projects**
- **No PROFIBUS DP Intermediate Segment required**
- **Prepared for Integration in Standard Engineering and Plant Asset Management Tools**

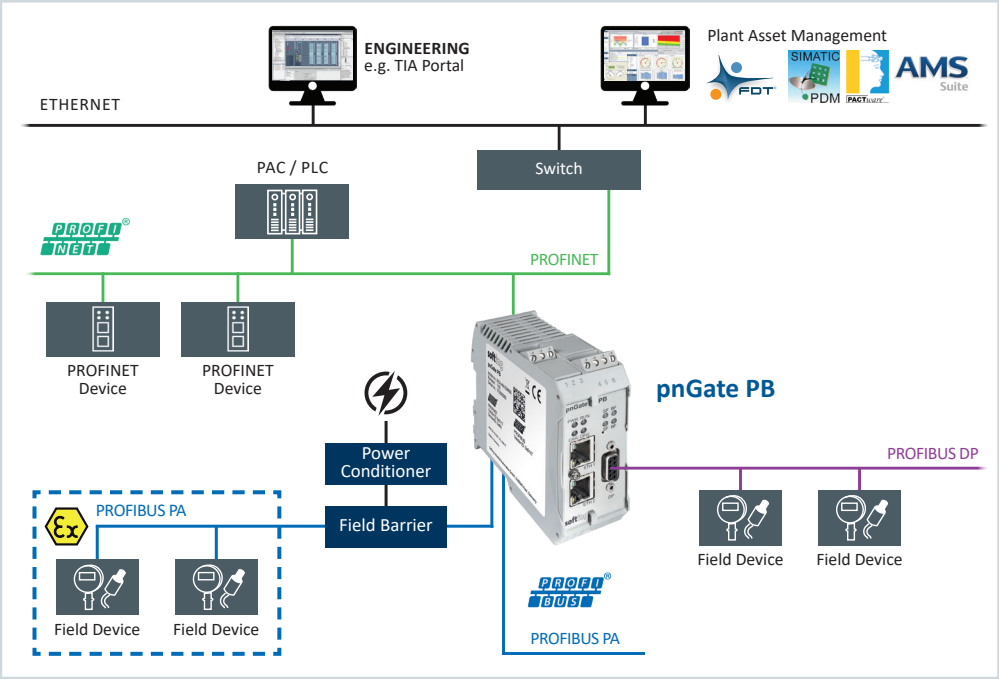


### Key Component for Transition to State-of-the-Art Technology

- Simple replacement of installed PROFIBUS DP/PA segment coupler
- Re-use of existing PROFIBUS segments without requiring modification
- Support of MRP and S2 PROFINET redundancy for increased reliability

### Direct Connectivity to PROFIBUS Segments

- Single access point to PROFIBUS DP and PROFIBUS PA segments from PROFINET networks
- Acting as PROFINET Device, PROFIBUS PA and PROFIBUS DP Master
- Support of one PROFIBUS DP segment and up to two PROFIBUS PA segments

### Configuration, Parameterization and Plant Asset Management Using Standard Industry Tools

- Supports major PROFINET engineering tools such as TIA Portal, Step7 and PC WORXS
- Included CommDTM allowing use in FDT/DTM frame applications
- EDD-based device parametrization using Siemens Simatic PDM

optimize!

# pnGate PB

## Technical Data

| | | |
|---|---|---|
| **Hardware** | Processor | Altera Cyclone V SoC with dual-core ARM Cortex-A9 |
| | Status LEDs (Gateway) | PWR (power supply), RUN (operation), ERR (error), CFG (configuration and update) |
| | Status LEDs (Fieldbus) | SF (system fault), BF (bus fault) |
| **Interfaces and Connectors** | Ethernet | 2 * IEEE 802.3 100BASE-TX / 10BASE-T, embedded PROFINET switch for daisy chain topology<br>Connectors: RJ45<br>Protocol: PROFINET RT / IRT, Support of PROFINET redundancy protocols<br>RESTful API interface for device configuration |
| | PROFIBUS PA | 2 * PROFIBUS PA (MBP) segments,<br>Bus-powered Medium Attachment Unit (MAU): Fieldbus voltage range: 9 VDC ... 32 VDC,<br>current consumption 10 mA, Connectors: 3-position screw connection, galvanically isolated |
| | PROFIBUS DP-V0 / V1 | 1 Segment with RS485 Physical Layer, Connector: 9-pin Sub-D socket |
| **Physical Properties** | Dimensions (H x W x D) | 100 mm x 35 mm x 115 mm |
| | Weight | Approx. 0.25 kg |
| | Power Supply | 18 VDC ... 32 VDC; SELV/PELV power supply mandatory<br>Typical input current: 200 mA, maximum input current: 1 A (allowing for in-rush current at switch-on)<br>No power supply to PROFIBUS PA segments through pnGate PB |
| | Typical Power Loss | 6 W |
| | Operating / Storage Temperature | -40 °C ... +60 °C / -40 °C ... +85 °C<br>(see detailed mounting description in user manual) |
| | Relative Humidity | 10 % ... 95 %, non-condensing |
| | Cooling | Convection, no fan |
| | Coating | Conformal coating based on ANSI / ISA-S71.04 G3 |
| | Mounting | DIN rail 35 mm |
| | Protection Class | IP20 |

## Scope of Delivery

| | |
|---|---|
| Hardware | pnGate PB Gateway |
| Documentation | On Website |

## Order Numbers

| | |
|---|---|
| GCA-AN-024608 | **pnGate PB**, PROFINET to PROFIBUS Gateway. **Supports up to 2 PROFIBUS PA segments** (up to 32 PA devices, MBP physical layer) and 1 PROFIBUS DP segment (RS485). |

## Additional Products and Services

| | |
|---|---|
| LRL-DY-134501 | **dataFEED OPC Suite**, Version 4.01 and higher, including all supported PLC protocols, support for OPC UA, access for any number of dataFEED OPC Tunnel Clients, for simultaneous access to a total of up to 100 OPC UA Servers, OPC Servers and OPC Tunnel Servers, and many more Functionalities such as Database and File Access, Data Exchange, Optimizer, Concentrator and Bridge |
| GCA-AL-024602 | **pnGate PA**, PROFINET to PROFIBUS-PA Gateway. **Supports up to 2 PROFIBUS PA segments** (up to 32 PA devices). |
| GCA-AL-024604 | **pnGate PA**, PROFINET to PROFIBUS-PA Gateway. **Supports up to 4 PROFIBUS PA segments** (up to 64 PA devices). |
| GCA-AL-024605 | **pnGate PA (for STAHL carrier)**, PROFINET to PROFIBUS-PA Gateway. **Supports up to 4 PROFIBUS PA segments** (up to 64 PA devices). For reversed mounting position on STAHL backplane |

Your local Softing contact:

**http://industrial.softing.com**

optimize!
softing

# pnGate DP

## Simple connection of PROFIBUS DP Slave Devices to PROFINET Control Systems via Internal I/O Mapping

- **Prepared for Integration in Standard Engineering and Plant Asset Management Tools**
- **Simple Configuration of Device Mapping via Built in Web Interface**
- **Compatible with Products of Leading PLC Manufacturers**

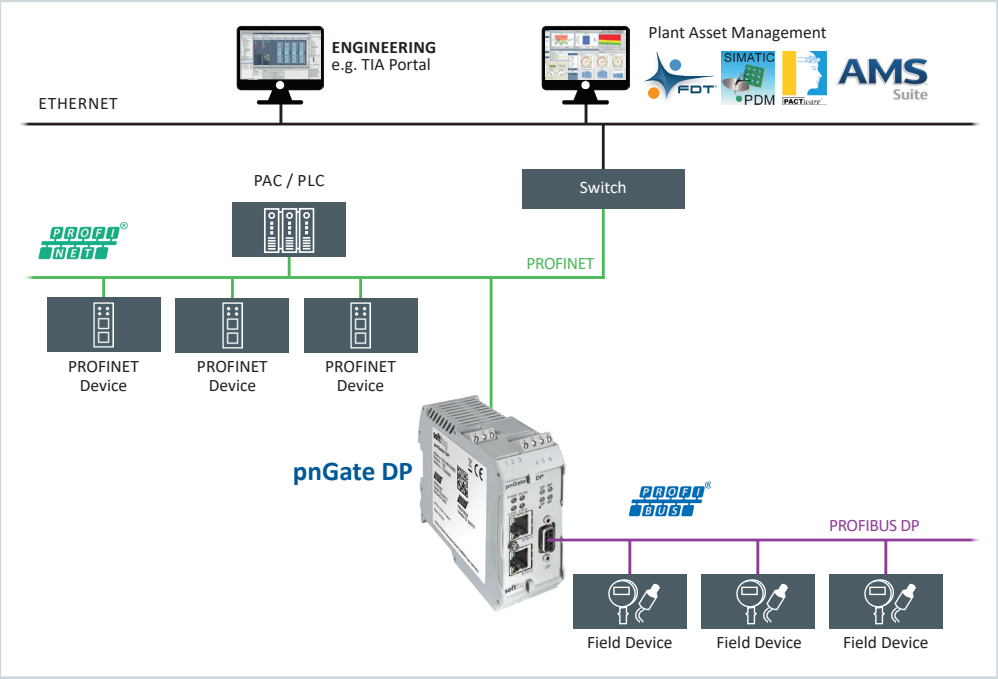


### Configuration, Parameterization and Plant Asset Management Using Standard Industry Tools

- Supports major PROFINET engineering tools such as TIA Portal, Step7 und PC WORXS
- Included CommDTM allowing use in FDT/DTM frame applications
- EDD-based device parametrization using Siemens Simatic PDM
- Maximum flexibility by supporting Configuration in Run

### Direct Connectivity to PROFIBUS Segments

- Single access point to PROFIBUS DP segment from PROFINET networks
- Acting as PROFINET device and PROFIBUS DP master
- Support of one PROFIBUS DP segment

### Key Component for Transition to State-of-the-Art Technology

- Re-use of existing PROFIBUS segments without requiring modification
- Support of MRP and S2 PROFINET redundancy for increased reliability

optimize!

# pnGate DP

## Technical Data

| | | |
|---|---|---|
| **Hardware** | Processor | Altera Cyclone V SoC with dual-core ARM Cortex-A9 |
| | Status LEDs (Gateway) | PWR (power supply), RUN (operation), ERR (error), CFG (configuration and update) |
| | Status LEDs (Fieldbus) | SF (system fault), BF (bus fault) |
| **Interfaces and Connectors** | Ethernet | 2 * IEEE 802.3 100BASE-TX / 10BASE-T, managed Ethernet switch for daisy chain totpology<br>Connectors: RJ45<br>Protocol: PROFINET RT / IRT, support of PROFINET redundancy protocols<br>RESTful API interface for device configuration |
| | PROFIBUS DP-V0 / V1 | 1 Segment with RS485 Physical Layer, Connector: 9-pin Sub-D socket |
| **Physical Properties** | Dimensions (H x W x D) | 100 mm x 35 mm x 115 mm |
| | Weight | Approx. 0.25 kg |
| | Power Supply | 18 VDC ... 32 VDC; SELV/PELV power supply mandatory<br>Typical input current: 200 mA, maximum input current: 1 A (allowing for in-rush current at switch-on) |
| | Typical Power Loss | 5 W |
| | Operating / Storage Temperature | -40 °C ... +60 °C / -40 °C ... +85 °C<br>(see detailed mounting description in user manual) |
| | Relative Humidity | 10 % ... 95 %, non-condensing |
| | Cooling | Convection, no fan |
| | Coating | Conformal coating based on ANSI / ISA-S71.04 G3 |
| | Mounting | DIN rail 35 mm |
| | Protection Class | IP20 |

## Scope of Delivery

| | |
|---|---|
| Hardware | pnGate DP Gateway |
| Documentation | On Website |

## Order Numbers

| | |
|---|---|
| GCA-AN-024606 | **pnGate DP**, PROFINET to PROFIBUS DP Gateway. Supports **1 PROFIBUS DP segment** (RS485). |

## Additional Products and Services

| | |
|---|---|
| LRL-DY-134501 | **dataFEED OPC Suite**, Version 4.01 and higher, including all supported PLC protocols, support for OPC UA, access for any number of dataFEED OPC Tunnel Clients, for simultaneous access to a total of up to 100 OPC UA Servers, OPC Servers and OPC Tunnel Servers, and many more Functionalities such as Database and File Access, Data Exchange, Optimizer, Concentrator and Bridge |
| GCA-AN-024608 | **pnGate PB**, PROFINET to PROFIBUS gateway. Supports **2 PA segments** (up to 32 PA devices, MBP physical layer) and **1 PROFIBUS DP segment** (RS485). |
| GCA-AL-024602 | **pnGate PA**, PROFINET to PROFIBUS PA gateway. Supports **up to 2 PA segments** (up to 32 PA devices). |
| GCA-AL-024604 | **pnGate PA**, PROFINET to PROFIBUS gateway. Supports **up to 4 PA segments** (up to 64 PA devices). |
| GCA-AL-024605 | **pnGate PA** (for STAHL carrier), PROFINET to PROFIBUS-PA gateway.<br>Supports **up to 4 PA segments** (up to 64 PA devices). For reverse installation position in STAHL backplane. |

Your local Softing contact:

**http://industrial.softing.com**

optimize!
softing

# mbGate PA

## Direct PROFIBUS PA Segment Integration into Modbus TCP Control Systems

- **Re-use of Existing Power Conditioners in Technology Upgrade Projects**
- **No PROFIBUS DP Intermediate Segment required**
- **Prepared for Integration in Standard Engineering and Plant Asset Management Tools**
- **MODBUS/TCP Redundancy**


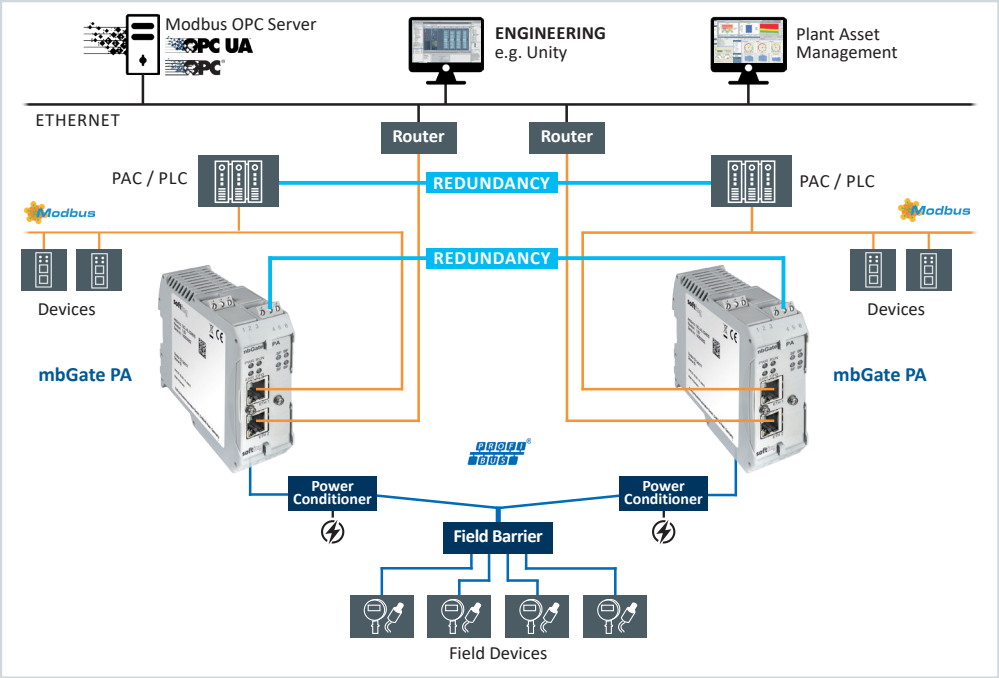


### Key Component for Transition to State-of-the-Art Technology

- Simple replacement of installed PROFIBUS DP/PA segment couplers
- Re-use of existing PROFIBUS PA segments without requiring modification

### Direct Connectivity to PROFIBUS Segments

- Acting as Modbus TCP Server and PROFIBUS PA Master
- Connects up to 4 PROFIBUS PA Segments to Modbus TCP

### Configuration, Parameterization and Plant Asset Management Using Standard Industry Tools

- Supports major Modbus engineering tools such as Schneider Unity Pro or Siemens TIA Portal
- Included CommDTM allowing use in FDT/DTM frame applications
- EDD-based device parametrization using Siemens Simatic PDM

### MODBUS/TCP Redundancy

- Supports the use of two redundant PLCs and two redundant gateways
- Easily enabled via licensing
- Full control of redundant operation mode via engineering and PLC

optimize!

# mbGate PA

## Technical Data

| | | |
|---|---|---|
| **Hardware** | Processor | Altera Cyclone V SoC with dual-core ARM Cortex-A9 |
| | Status LEDs (Gateway) | PWR (power supply), RUN (operation), ERR (error), CFG (configuration and update) |
| | Status LEDs (Fieldbus) | SF (system fault), BF (bus fault) |
| **Interfaces and Connectors** | Ethernet | 2 * IEEE 802.3 100BASE-TX / 10BASE-T, managed Ethernet switch for daisy chain totpology<br>Connectors: RJ45<br>Protocol: Modbus TCP Server<br>RESTful API interface for device configuration |
| | PROFIBUS PA | Up to 4 PROFIBUS PA (MBP) segments (refer to the section „Order Numbers“),<br>Bus-powered Medium Attachment Unit (MAU): Fieldbus voltage range: 9 VDC ... 32 VDC,<br>current consumption 10 mA, Connectors: 3-position screw connection, galvanically isolated |
| **Physical Properties** | Dimensions (H x W x D) | 100 mm x 35 mm x 115 mm |
| | Weight | Approx. 0.25 kg |
| | Power Supply | 18 VDC ... 32 VDC; SELV/PELV power supply mandatory<br>Typical input current: 200 mA, maximum input current: 1 A (allowing for in-rush current at switch-on)<br>No power supply to PROFIBUS PA segments through mbGate PA |
| | Typical Power Loss | 6 W |
| | Operating / Storage Temperature | -40 °C ... +60 °C / -40 °C ... +85 °C<br>(see detailed mounting description in user manual) |
| | Relative Humidity | 10 % ... 95 %, non-condensing |
| | Cooling | Convection, no fan |
| | Coating | Conformal coating based on ANSI / ISA-S71.04 G3 |
| | Mounting | DIN rail 35 mm |
| | Protection Class | IP20 |

## Scope of Delivery

| | |
|---|---|
| Hardware | mbGate PA Gateway |
| Documentation | On Website |

## Order Numbers

| | |
|---|---|
| GCA-EL-024802 | **mbGate PA**, Modbus TCP to PROFIBUS PA Gateway. Supports **up to 2 PA segments** (up to 32 PA devices). |
| GCA-EL-024804 | **mbGate PA**, Modbus TCP to PROFIBUS PA Gateway. Supports **up to 4 PA segments** (up to 64 PA devices) |

## Additional Products and Services

| | |
|---|---|
| LRL-DY-134501 | **dataFEED OPC Suite**, Version 4.01 and higher, including all supported PLC protocols, support for OPC UA, access for any number of dataFEED OPC Tunnel Clients, for simultaneous access to a total of up to 100 OPC UA Servers, OPC Servers and OPC Tunnel Servers, and many more Functionalities such as Database and File Access, Data Exchange, Optimizer, Concentrator and Bridge |
| GCA-EN-024808 | **mbGate PB**, Modbus TCP to PROFIBUS Gateway. Supports **2 PA segments** (up to 32 PA devices, MBP physical layer) and **1 PROFIBUS DP segment** (RS485). |
| GCA-EN-024806 | **mbGate DP**, Modbus TCP to PROFIBUS DP Gateway. Supports **1 PROFIBUS DP segment** (RS485). |

Your local Softing contact:

**http://industrial.softing.com**

optimize!
softing

# mbGate PB

## Simple connection of PROFIBUS Slave Devices to Modbus Control Systems via Internal I/O Mapping

- **Re-use of Existing Power Conditioners in Technology Upgrade Projects**
- **Simple Configuration of Device Mapping via Built in Web Interface**
- **Prepared for Integration in Standard Engineering and Plant Asset Management Tools**
- **MODBUS/TCP Redundancy**


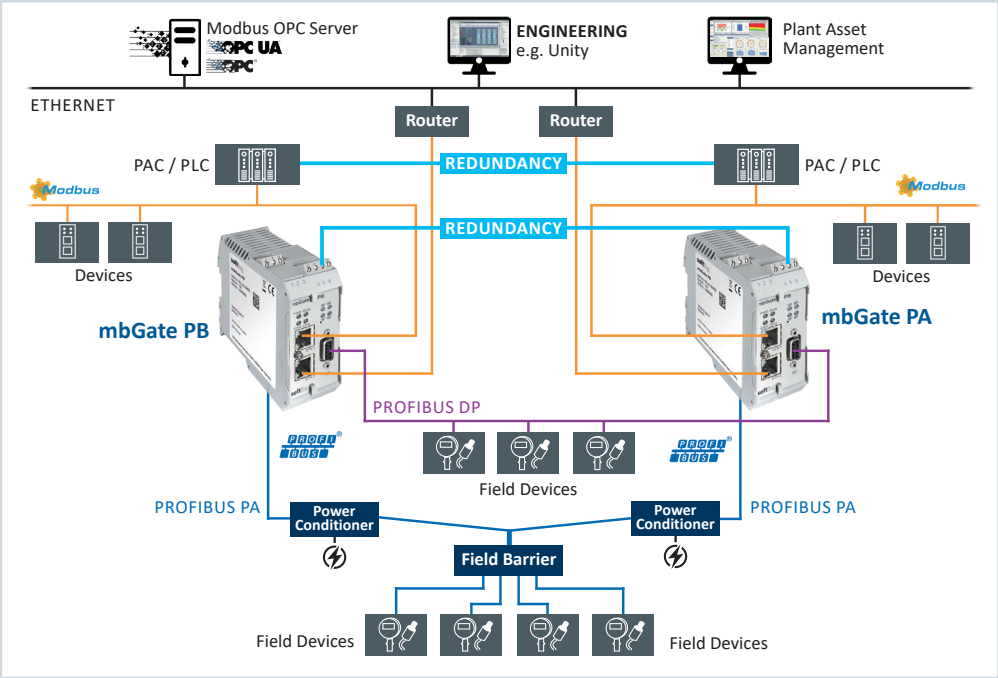


### Key Component for Transition to State-of-the-Art Technology

- Simple replacement of installed PROFIBUS DP/PA segment couplers
- Re-use of existing PROFIBUS segments without requiring modification

### Direct Connectivity to PROFIBUS Segments

- Single access point to PROFIBUS DP and PROFIBUS PA segments from Modbus TCP networks
- Acting as Modbus TCP Server and PROFIBUS PA and PROFIBUS DP Master
- Support of one PROFIBUS DP segment and up to two PROFIBUS PA segments

### Configuration, Parameterization and Plant Asset Management Using Standard Industry Tools

- Supports major Modbus engineering tools such as Schneider Unity Pro or Siemens TIA Portal
- Included CommDTM allowing use in FDT/DTM frame applications
- EDD-based device parametrization using Siemens Simatic PDM

### MODBUS/TCP Redundancy

- Supports the use of two redundant PLCs and two redundant gateways
- Easily enabled via licensing
- Full control of redundant operation mode via engineering and PLC

optimize!

# mbGate PB

## Technical Data

| | | |
|---|---|---|
| **Hardware** | Processor | Altera Cyclone V SoC with dual-core ARM Cortex-A9 |
| | Status LEDs (Gateway) | PWR (power supply), RUN (operation), ERR (error), CFG (configuration and update) |
| | Status LEDs (Fieldbus) | SF (system fault), BF (bus fault) |
| **Interfaces and Connectors** | Ethernet | 2 * IEEE 802.3 100BASE-TX / 10BASE-T, managed Ethernet switch for daisy chain totpology<br>Connectors: RJ45<br>Protocol: Modbus TCP Server<br>RESTful API interface for device configuration |
| | PROFIBUS PA | 2 * PROFIBUS PA (MBP) segments, Bus-powered Medium Attachment Unit (MAU): Fieldbus voltage range: 9 VDC ... 32 VDC, current consumption 10 mA, Connectors: 3-position screw connection, galvanically isolated |
| | PROFIBUS DP-V0 / V1 | 1 Segment with RS485 Physical Layer, Connector: 9-pin Sub-D socket |
| **Physical Properties** | Dimensions (H x W x D) | 100 mm x 35 mm x 115 mm |
| | Weight | Approx. 0.25 kg |
| | Power Supply | 18 VDC ... 32 VDC; SELV/PELV power supply mandatory<br>Typical input current: 200 mA, maximum input current: 1 A (allowing for in-rush current at switch-on)<br>No power supply to PROFIBUS PA segments through mbGate PB |
| | Typical Power Loss | 6 W |
| | Operating / Storage Temperature | -40 °C ... +60 °C / -40 °C ... +85 °C<br>(see detailed mounting description in user manual) |
| | Relative Humidity | 10 % ... 95 %, non-condensing |
| | Cooling | Convection, no fan |
| | Coating | Conformal coating based on ANSI / ISA-S71.04 G3 |
| | Mounting | DIN rail 35 mm |
| | Protection Class | IP20 |

## Scope of Delivery

| | |
|---|---|
| Hardware | mbGate PB Gateway |
| Documentation | On Website |

## Order Numbers

| | |
|---|---|
| GCA-EN-024808 | **mbGate PB**, Modbus TCP to PROFIBUS Gateway.<br>Supports **2 PA segments** (up to 32 PA devices, MBP physical layer) and **1 PROFIBUS DP segment** (RS485). |

## Additional Products and Services

| | |
|---|---|
| LRL-DY-134501 | **dataFEED OPC Suite**, Version 4.01 and higher, including all supported PLC protocols, support for OPC UA, access for any number of dataFEED OPC Tunnel Clients, for simultaneous access to a total of up to 100 OPC UA Servers, OPC Servers and OPC Tunnel Servers, and many more Functionalities such as Database and File Access, Data Exchange, Optimizer, Concentrator and Bridge |
| GCA-EL-024802 | **mbGate PA**, Modbus TCP to PROFIBUS PA Gateway. Supports **up to 2 PA segments** (up to 32 PA devices). |
| GCA-EL-024804 | **mbGate PA**, Modbus TCP to PROFIBUS PA Gateway. Supports **up to 4 PA segments** (up to 64 PA devices). |
| GCA-EN-024806 | **mbGate DP**, Modbus TCP to PROFIBUS DP Gateway. Supports **1 PROFIBUS DP segment** (RS485). |

Your local Softing contact:

**http://industrial.softing.com**

optimize!
softing

# mbGate DP

## Simple connection of PROFIBUS DP Slave Devices to Modbus Control Systems via Internal I/O Mapping

- **Prepared for Integration in Standard Engineering and Plant Asset Management Tools**
- **Simple Configuration of Device Mapping via Built in Web Interface**
- **Compatible with Products of Leading PLC Manufacturers**
- **MODBUS/TCP Redundancy**


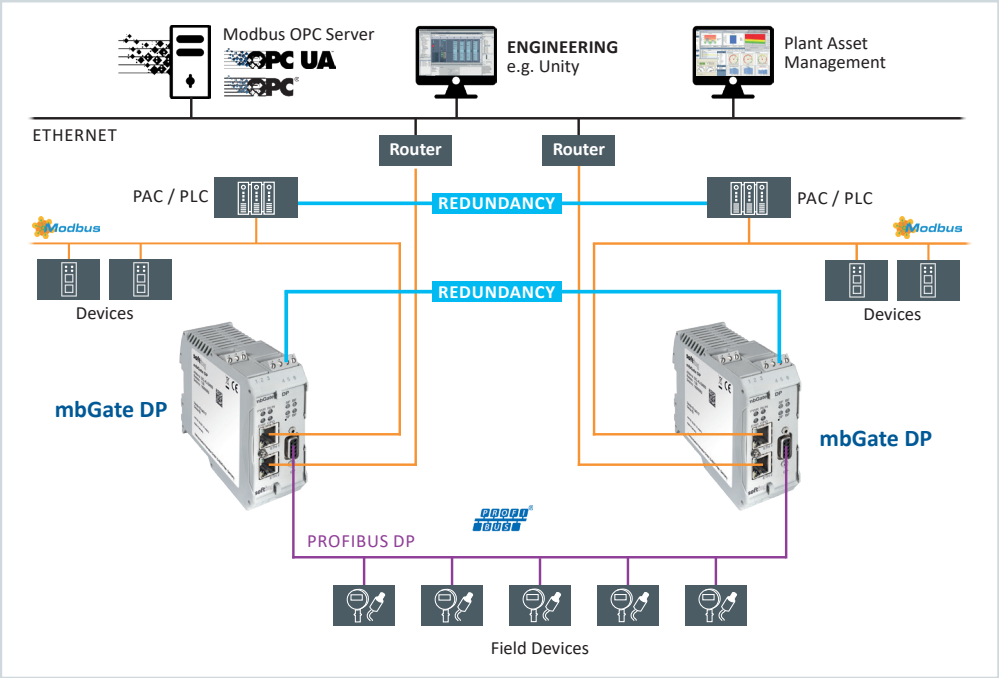


### Configuration, Parameterization and Plant Asset Management Using Standard Industry Tools

- Supports major Modbus engineering tools such as Schneider Unity Pro or Siemens TIA Portal
- Included CommDTM allowing use in FDT/DTM frame applications
- EDD-based device parametrization using Siemens Simatic PDM

### Direct Connectivity to PROFIBUS Segments

- Single access point to PROFIBUS DP segment from Modbus TCP networks
- Acting as Modbus TCP Server and PROFIBUS DP Master
- Support of one PROFIBUS DP segment

### Key Component for Transition to State-of-the-Art Technology

- Re-use of existing PROFIBUS DP segment without requiring modification
- Easy integration into PLC programming software

### MODBUS/TCP Redundancy

- Supports the use of two redundant PLCs and two redundant gateways
- Easily enabled via licensing
- Full control of redundant operation mode via engineering and PLC

optimize!

# mbGate DP

## Technical Data

| | | |
|---|---|---|
| **Hardware** | Processor | Altera Cyclone V SoC with dual-core ARM Cortex-A9 |
| | Status LEDs (Gateway) | PWR (power supply), RUN (operation), ERR (error), CFG (configuration and update) |
| | Status LEDs (Fieldbus) | SF (system fault), BF (bus fault) |
| **Interfaces and Connectors** | Ethernet | 2 * IEEE 802.3 100BASE-TX / 10BASE-T, managed Ethernet switch for daisy chain totpology<br>Connectors: RJ45<br>Protocol: Modbus TCP Server<br>RESTful API interface for device configuration |
| | PROFIBUS DP-V0 / V1 | 1 Segment with RS485 Physical Layer, Connector: 9-pin Sub-D socket |
| **Physical Properties** | Dimensions (H x W x D) | 100 mm x 35 mm x 115 mm |
| | Weight | Approx. 0.25 kg |
| | Power Supply | 18 VDC ... 32 VDC; SELV/PELV power supply mandatory<br>Typical input current: 200 mA, maximum input current: 1 A (allowing for in-rush current at switch-on) |
| | Typical Power Loss | 5 W |
| | Operating / Storage Temperature | -40 °C ... +60 °C / -40 °C ... +85 °C<br>(see detailed mounting description in user manual) |
| | Relative Humidity | 10 % ... 95 %, non-condensing |
| | Cooling | Convection, no fan |
| | Coating | Conformal coating based on ANSI / ISA-S71.04 G3 |
| | Mounting | DIN rail 35 mm |
| | Protection Class | IP20 |

## Scope of Delivery

| | |
|---|---|
| Hardware | mbGate DP Gateway |
| Documentation | On Website |

## Order Numbers

| | |
|---|---|
| GCA-EN-024806 | **mbGate DP**, Modbus TCP to PROFIBUS DP Gateway. Supports **1 PROFIBUS DP segment** (RS485). |

## Additional Products and Services

| | |
|---|---|
| LRL-DY-134501 | **dataFEED OPC Suite**, Version 4.01 and higher, including all supported PLC protocols, support for OPC UA, access for any number of dataFEED OPC Tunnel Clients, for simultaneous access to a total of up to 100 OPC UA Servers, OPC Servers and OPC Tunnel Servers, and many more Functionalities such as Database and File Access, Data Exchange, Optimizer, Concentrator and Bridge |
| GCA-EL-024802 | **mbGate PA**, Modbus TCP to PROFIBUS PA Gateway. Supports **up to 2 PA segments** (up to 32 PA devices). |
| GCA-EL-024804 | **mbGate PA**, Modbus TCP to PROFIBUS PA Gateway. Supports **up to 4 PA segments** (up to 64 PA devices). |
| GCA-EN-024808 | **mbGate PB**, Modbus TCP to PROFIBUS Gateway.<br>Supports **2 PA segments** (up to 32 PA devices, MBP physical layer) and **1 PROFIBUS DP segment** (RS485). |

Your local Softing contact:

**http://industrial.softing.com**

optimize!
softing

# SPI 3

## Connecting Serial Devices to PROFIBUS Networks

- **Integration of devices with a serial interface as DP slave devices in PROFIBUS**
- **Suitable for simple applications as well as for more complex applications**
- **Configuration with GSD file via the respective PROFIBUS DP master**


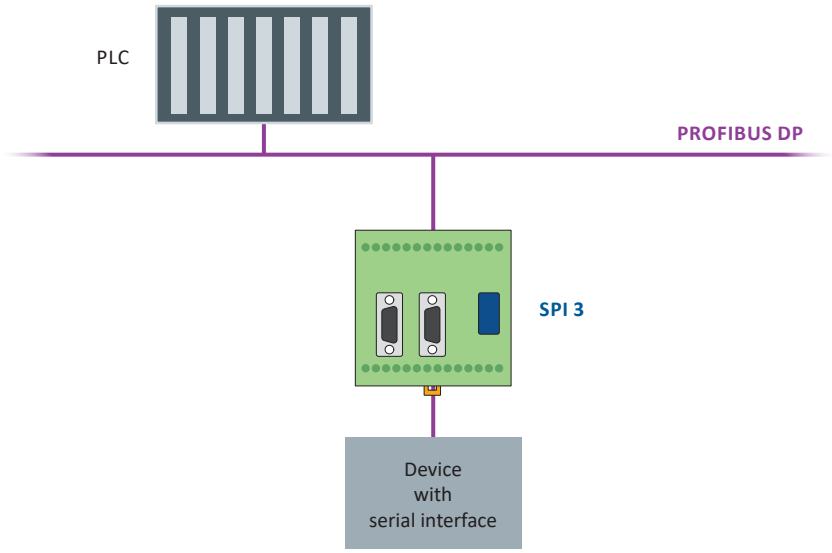


### Available for various protocols and physical interfaces

- In decentralized PROFIBUS installations, the SPI 3 replaces the serial interface inside the PLC
- DP slave with a transmission rate of 9.6 kBit/s up to 12 MBit/s
- Serial transmission rate 110 Bit/s up to 57.6 kBit/s (depending on the protocol)
- Serial interfaces RS 232, RS 422 or RS 485 available

### Wide range of application areas

- Connecting text displays or barcode scanners
- Integration of identification systems, scales, controllers and laboratory equipment

### Plug & play integration into PROFIBUS

- Easy installation and parameterization
- Configuration without additional software
- Flexible configuration of PROFIBUS IO range
- IO range configurable from 2 to 64 data words

optimize!

# SPI 3

| Technical Data | |
|---|---|
| **Nominal supply voltage** | 24 V DC (19.2 … 28.8) |
| **Current consumption** | max. 200 mA |
| **Ambient temperature range** | 0 ... +60°C |
| **Transmission rate serial** | 1110 Bit/s up to 57.6 kBit/s (depending on the protocol) |
| **Interface serial** | RS 232, RS 422, RS 485 (interface as per order) |
| **Protocols serial** | Free ASCII driver, 3964R, RK512, Modbus RTU |
| **Transmission rate PROFIBUS** | 9.6 kBit/s up to 12 MBit/s |
| **Interface PROFIBUS** | RS 485 |
| **IO Range PROFIBUS** | 2, 4, 8, 16, 32, 64 data words (depending on the protocol) |
| **Case, protection class** | Plastic, IP 20 |
| **Mounting** | 35 mm DIN top hat rail |
| **Dimensions W x H x D** | 75 x 75 x 53 mm |
| **Weight** | 136 g |
| **Certificate** | CE, UL |

| Scope of Delivery | |
|---|---|
| Hardware | SPI 3 |
| Documentation | Installation Guide<br>**By Download:** Docu + Media Kit (includes online documentation, GSE, function blocks for SIMATIC S5 and S7, example projects), Release Note |

| Order Numbers | |
|---|---|
| GPA-NS-011236 | SPI 3 RS 232 |
| GPA-NS-011237 | SPI 3 RS 422 |
| GPA-NS-011238 | SPI 3 RS 485 |

Your local Softing contact:

**http://industrial.softing.com**

optimize!
softing