TR Electronic

Presents…….

TR ELECTRONIC

. . . Passionate about Sensors.

Laser Positioning & Measurement

Introduction

Steve Cecchini

-Experience spanning two decades implementing sensor and feedback solutions in a multitude of different industries across North America .

-Currently the Regional Sales Manager of the Midwest.

Introduction

Tristan Pawluch

-13+ years implementing, troubleshooting, piloting and retrofitting solutions for power generation and positioning feedback applications across North America.

-Currently the Applications and Training Supervisor for North America.

Agenda

- TR Electronic Overview
- Light & Optics
- Laser Positioning
- Laser Principles
- Applications
- Questions

TR Electronic Overview

TR ELECTRONIC

. . . Passionate about Sensors.

Who is TR?

***TR* Electronic** is a:

Designer – Developer – Manufacturer – Distributor
….Of Rotary, Linear, Laser Measurement and Presence Detection Devices.

Providing Measurement and Automation Solutions for the Manufacturing Industry for over 25 years!

TR Electronic is also proud to have a dedicated Training and Technical Service Center for **all** Industrial Positioning and Sensing Solutions.

Providing our Customers with ***OUTSTANDING*** Customer Service and Support

"Thank you for assisting today. My guys were impressed with your knowledge and ability to assist further than originally expected. The great level of service is what separates the great companies that will gain return business from the "Also-rans". " - Line Manager, Plant Engineering - Electrical

Who is TR?

***TR* Electronic** – Your exclusive North American source for:

TR Electronic, SENSEable, di-soric, Microsonic, and PowerGap

Unmatched Technical Support and Customer Service 24 /7, 365 Days of the year!

Let us earn your business – Our Goal, is Your Success

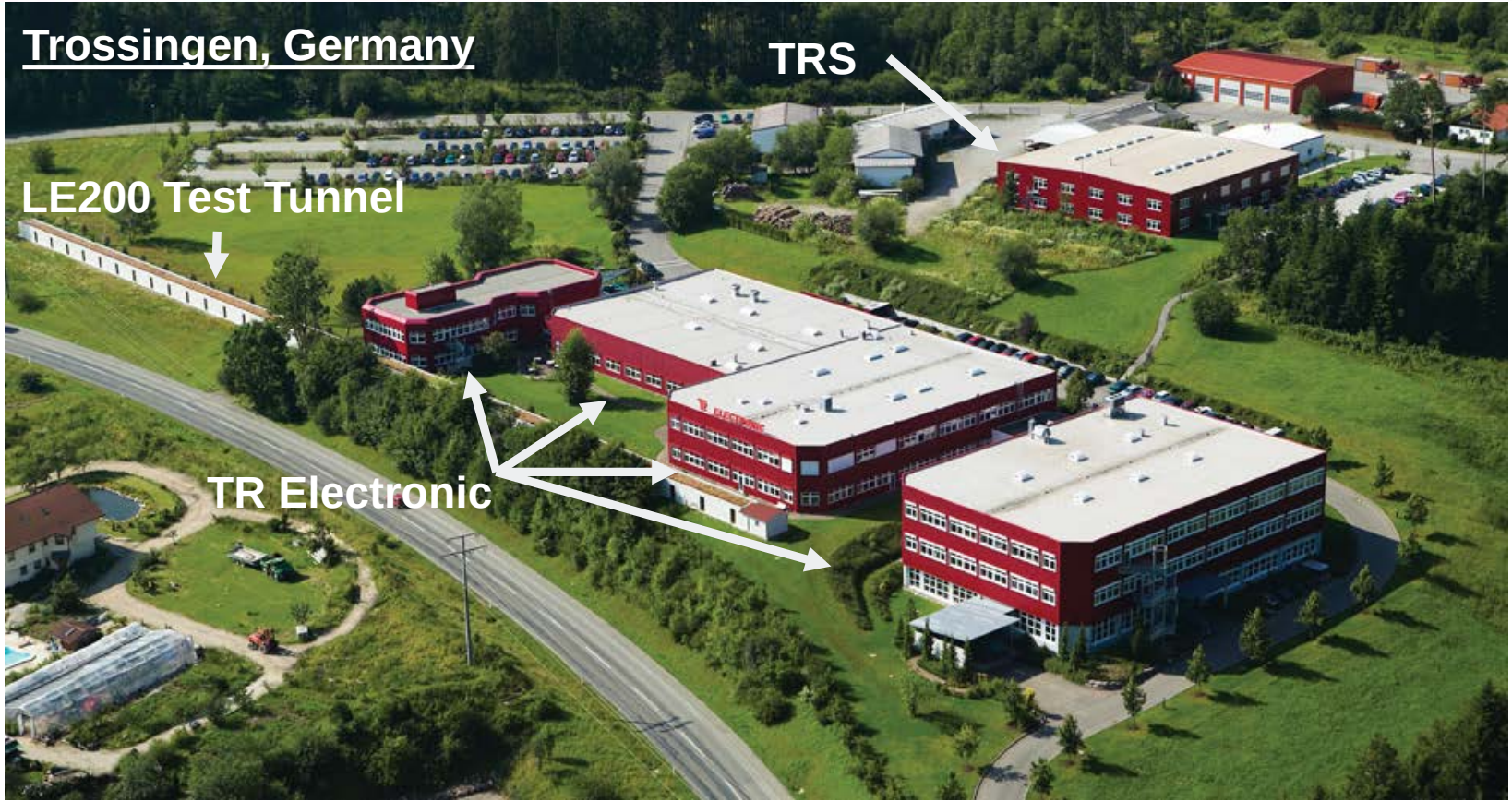
Trossingen, Germany
TRS
LE200 Test Tunnel
TR Electronic

Light & Optics

TR ELECTRONIC

. . . *Passionate* about Sensors.

Red Light

-Red objects reflect red light

-Laser light is also called “collimated” light.

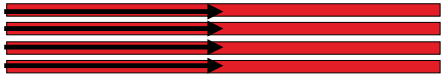

-Collimated light holds it’s intensity strength for longer distances than diode or “cone shaped” light.

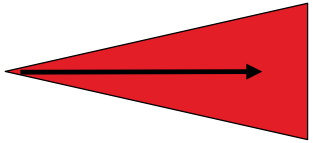

-Laser receiving optics are more sensitive to specific wavelengths of light than your eyes are.

-Red Light operates within a range of red-light wavelengths. 620-750 nm (400-484 THz)

Receiving Optics

- Receiving optics look for incoming light.
- Receiving optics can be structured using one photoelectric sensor or multiple photoelectric sensor built into an array.

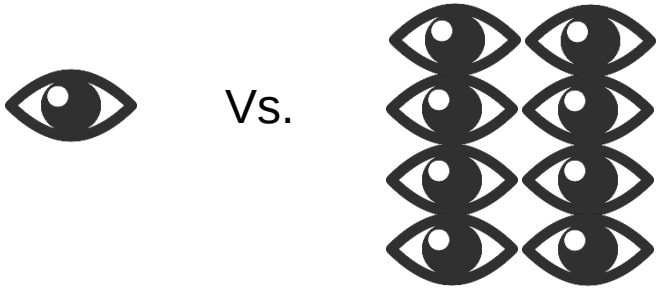

- Array's can be configured for one use, "Do I see or not", or multiple uses, "x out of y sensors see, therefore good!", OR, "perform a math function"

Laser Positioning

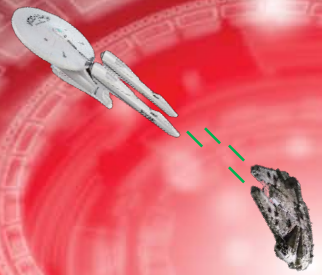

TR ELECTRONIC

. . . Passionate about Sensors.

Laser Positioning /Measurement

- Absolute and Non-Contact
- Linear / Non-Linear Measurement
- Linearized Accuracy
- High-speed Linearized Positioning
- Able to Detect Moving Targets
- Fast Cycle Times
- 0-65m, 0-250m, 0-500m, 0-10Km

Laser Positioning /Measurement

- Reflector / Non Reflector Requiring Units
- Fast Integration Time (up to 1 ms)
- Easy to Use Configuration Utility
- Multitude of interface options
- Heating /Cooling options

- **5 Methods!**

Phase Displacement	Time Of Flight	Triangulation	Through Beam	Bar Code Reading
				

Short Range < 10m

Bar Code Reading:

- A wide laser beam is emitted across several bar codes.
- The position of the read codes is determined within the span of the wide beam using the multiple codes.
- Actual position is then calculated to within 1mm using code information & code position.

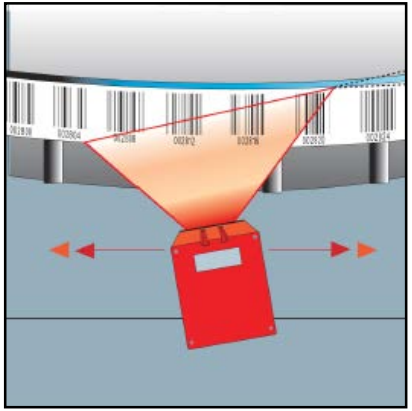

Through-Beam Sensors

-Optical Sensors which use separate emitters and receivers, to determine the presence of an object.
-Functions using one main principle:

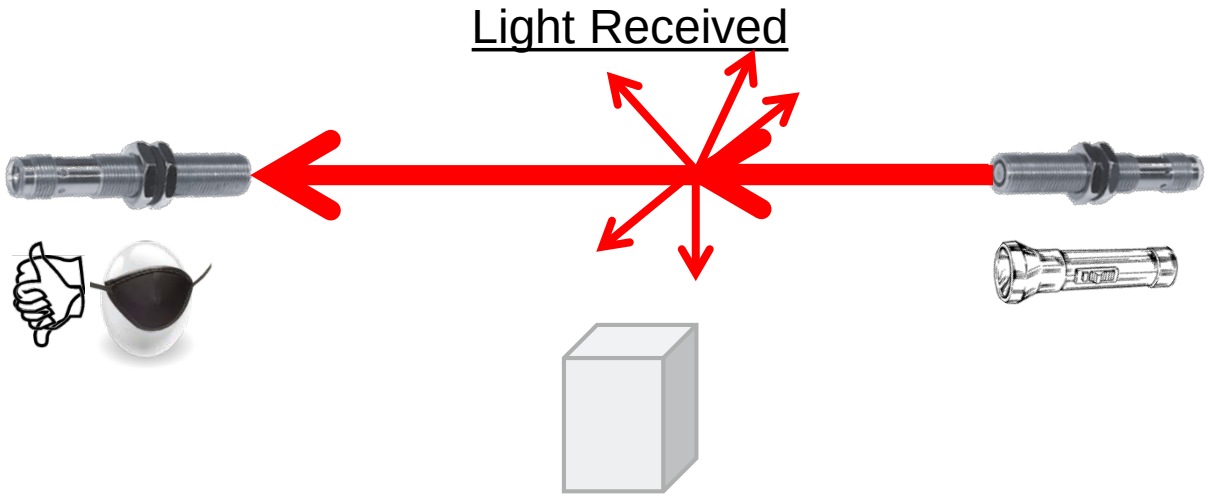

Through-Beam Sensors…cont'd

-Optical Sensors which use separate emitters and receivers, to determine the presence of an object.
-Functions using one main principle:

Light Received

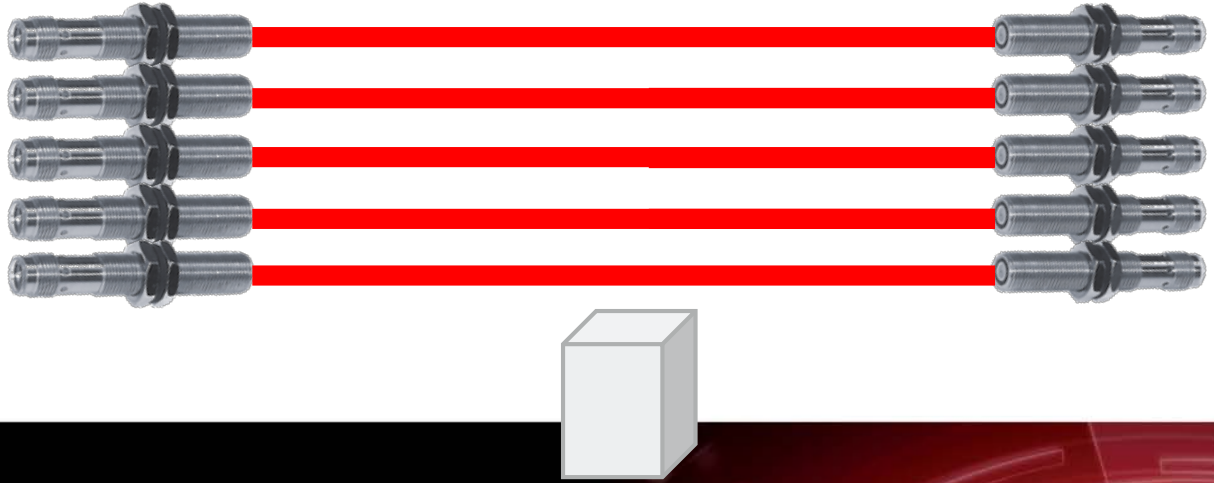

Parallel Laser Sensors

-Optical Sensors which use separate emitters and receivers, to determine the presence of an object.
-Functions using one main principle:

Differential Light Received

LLGT 081

- No Reflector Required
- Easy to Use Teach-In function
- Communication Protocols:
- Analog (0(4)…20mA or 0…10vdc)
- Configurable Digital Outputs
- 80 mm Fork Opening
- 20µm Resolution

- Smallest detectable object: 0.5mm (on switching o/p)

Triangulation:

- A beam is shot out at an object.
- The object reflects the light back to the sensor at different angles depending on its distance from the face of the sensor to the object.
- The reflected beam is received by an array and uses this information to calculate the received angle and in turn, the distance to target.

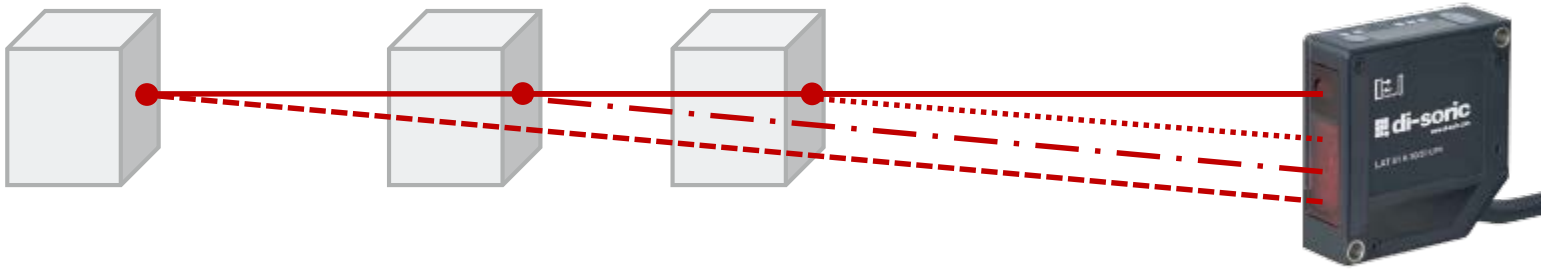

Time of Flight:

- A beam is emitted out to an object. Part of the beam is reflected internally.
- The object reflects the light.
- The unit measures the amount of time it takes to receive the beam back and calculates the distance accordingly.

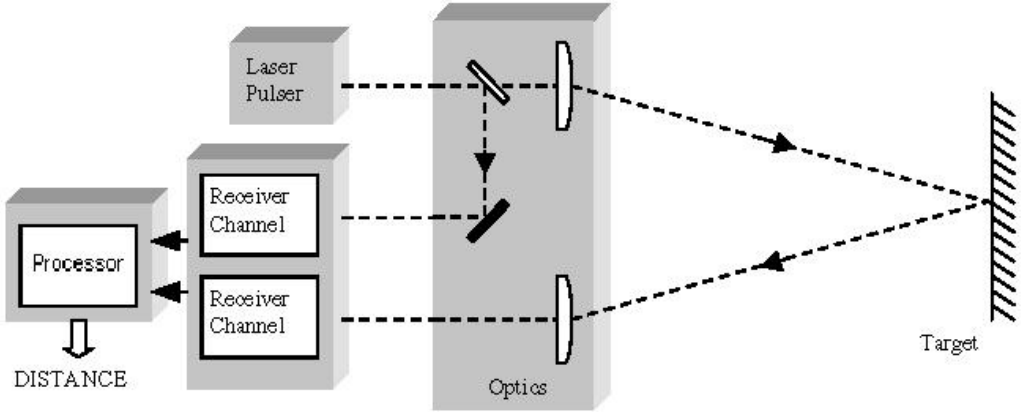

Phase Displacement (shift):

- A beam is emitted out to a reflector.
- The reflector reflects the light, with a phase shift.
- The unit calculates the distance based on phase shift and frequency.

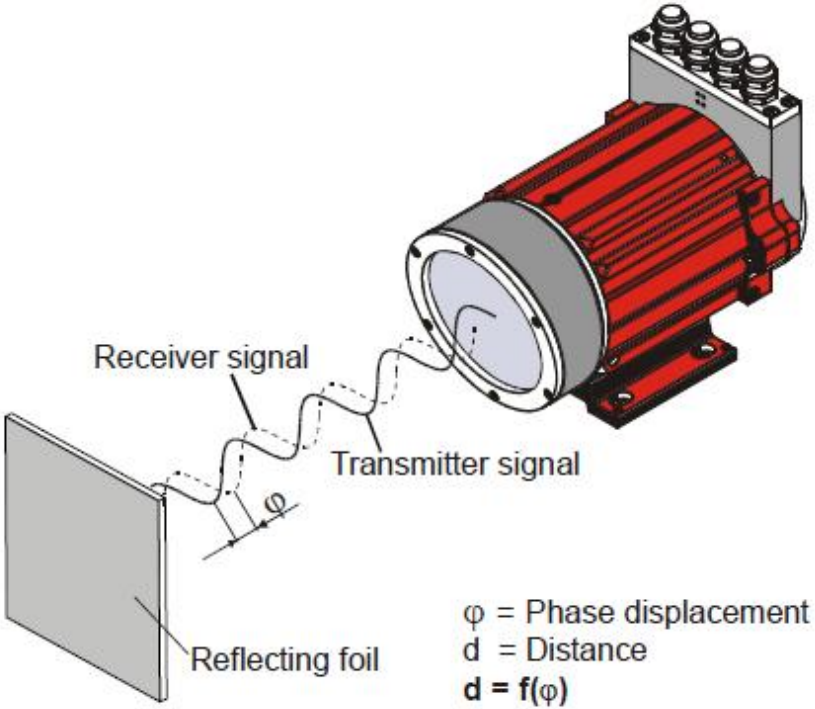

Linearization

TR ELECTRONIC
. . . Passionate about Sensors.


REMEMBER THE TUNNEL!!!
LE200 Test Tunnel

Linearization:

Defined: a linear approximation of a nonlinear system that is valid in a small region around the operating point.

Linear Measurement $\neq$ Linearization

Linear measurement = Straight line measurement

Linearization

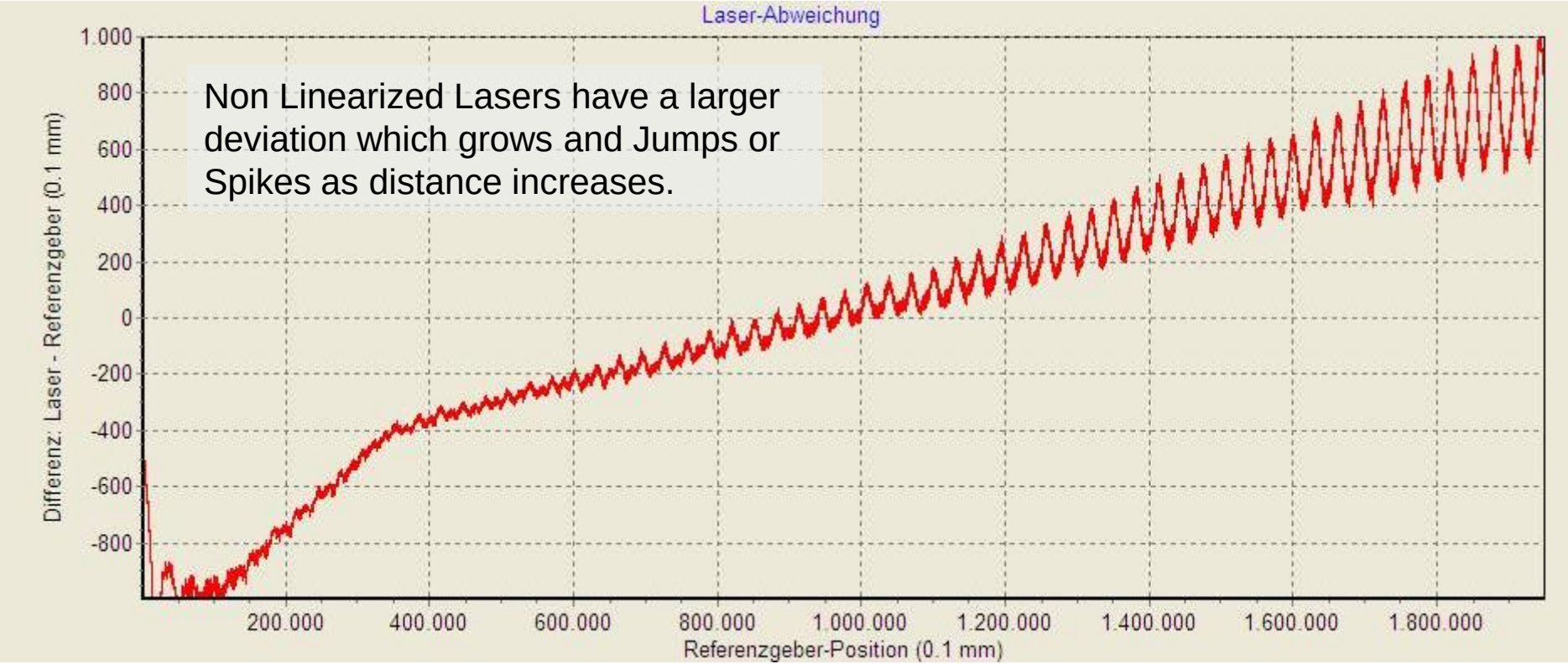

Non Linearized Lasers have a larger deviation which grows and Jumps or Spikes as distance increases.

Linearization

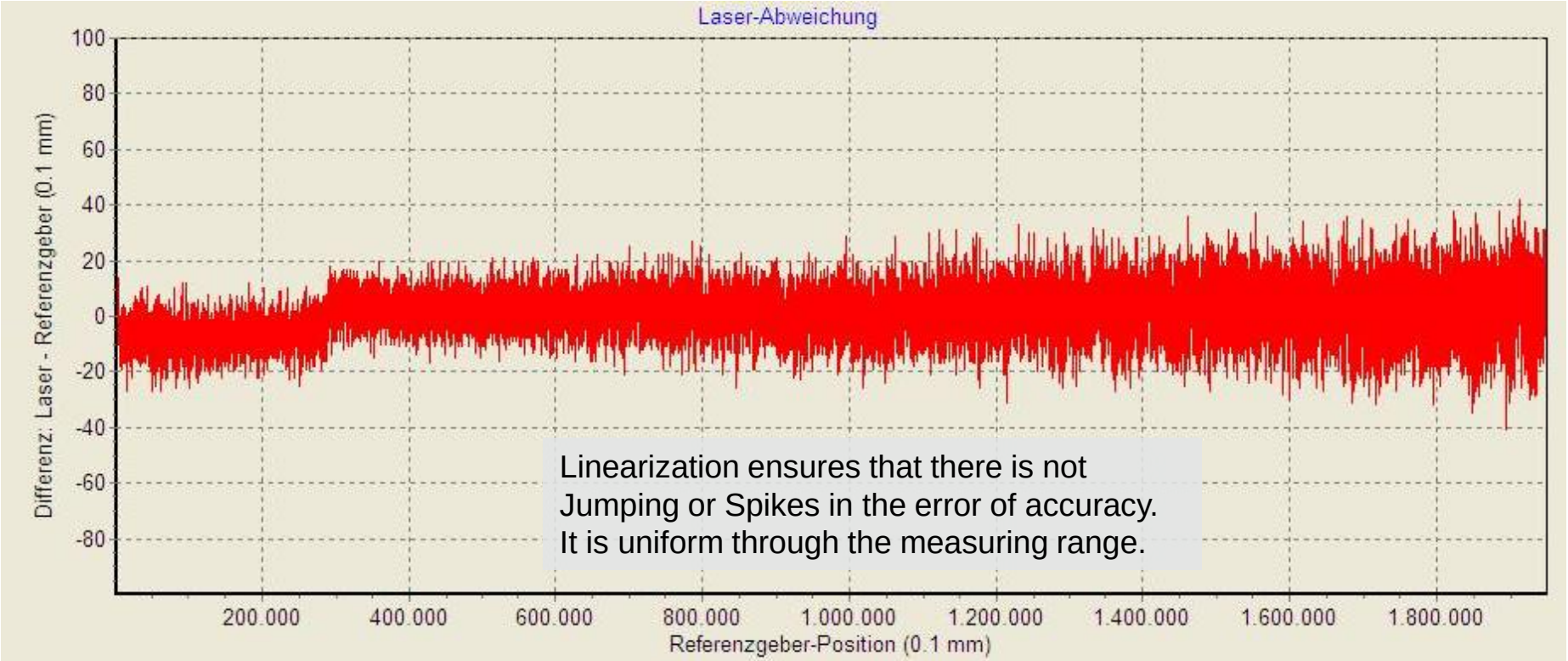

Linearization ensures that there is not Jumping or Spikes in the error of accuracy. It is uniform through the measuring range.

Applications

TR ELECTRONIC
. . . Passionate about Sensors.

Loop Control

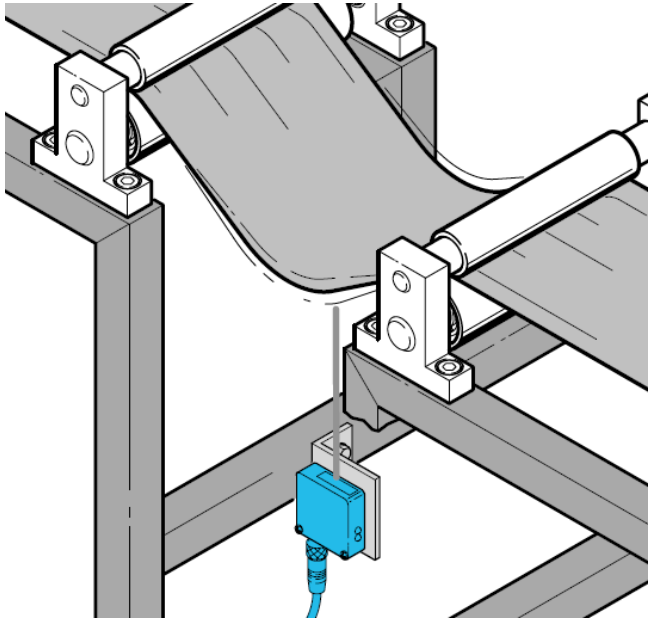

Diameter Measurement

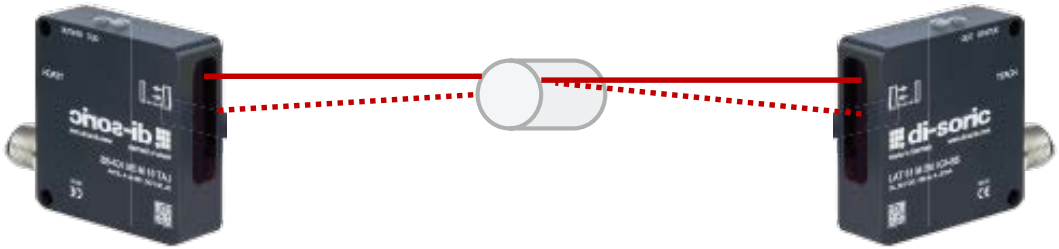

Imbalance Examination

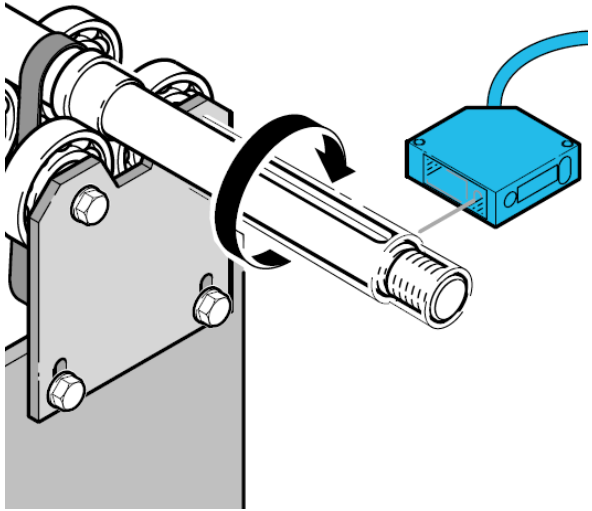

Part Location /Detection

Offset mounting to get around blind zone.

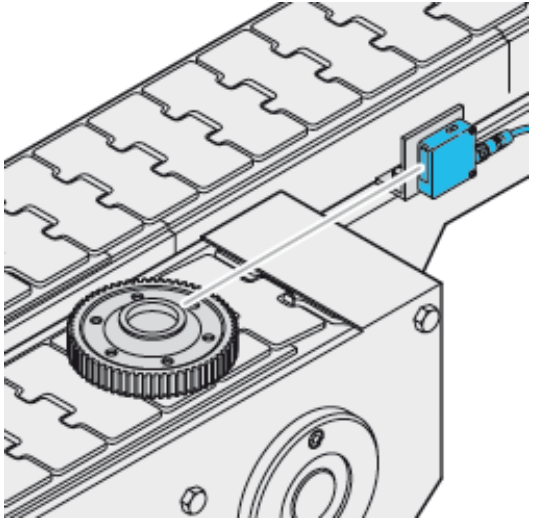

Coarse Distance Measurement

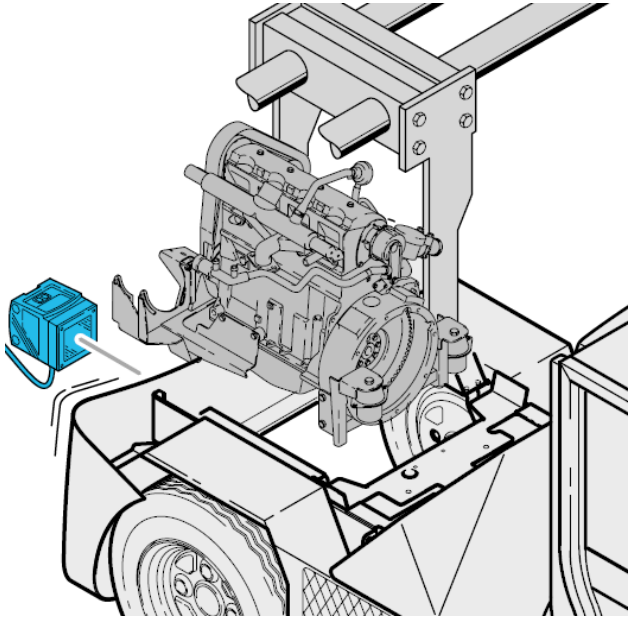

Part Comparison – Part Sort

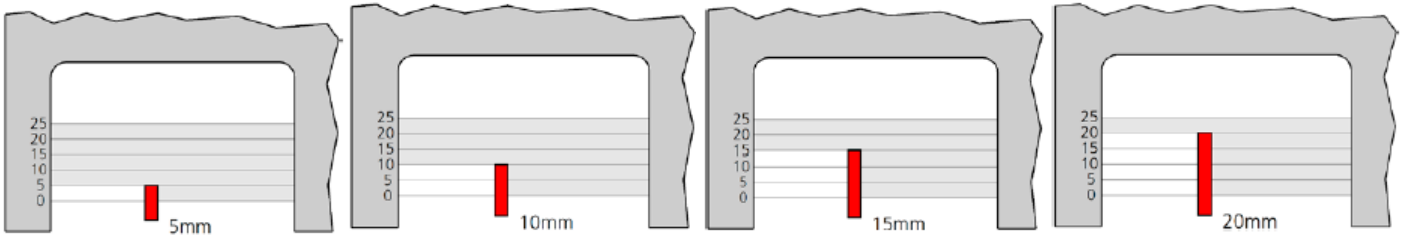

Part Comparison – Quality Control

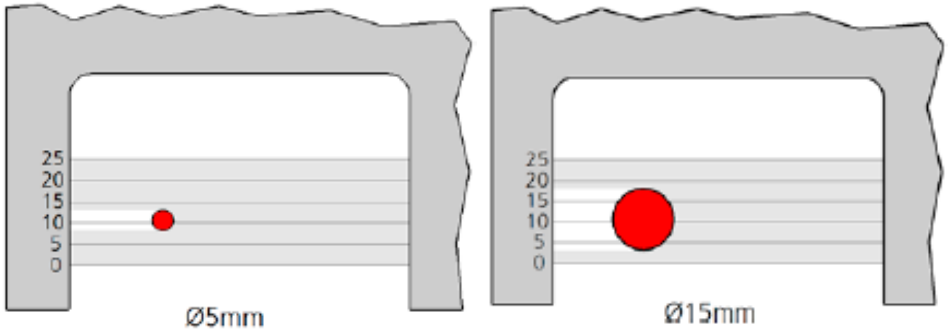

Web Edge Detection / Control

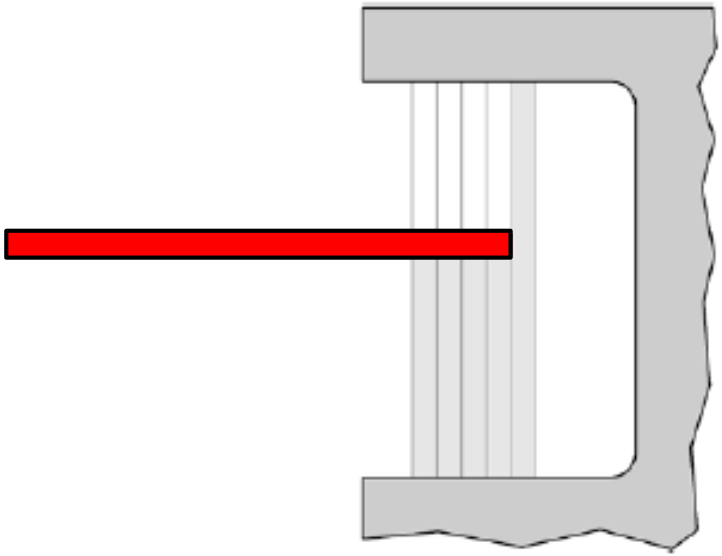

Log Measurement

Leaf Spring Forming

Metal Mold Cup Measurement

Overhead Gantry Crane Positioning

- Fine Positioning
- Moving Target
- Fast Cycle Time

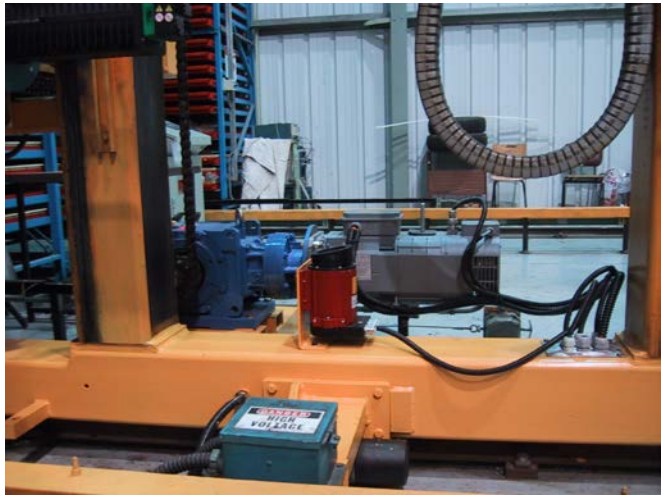

Overhead Gantry Crane Positioning…Cont'd

Crane and Overhead Gantry Systems…again.

Printing and Packaging

Automated Warehouse Systems

- Fine Positioning
- Moving Target

Train Swing Bridge

AGV Application

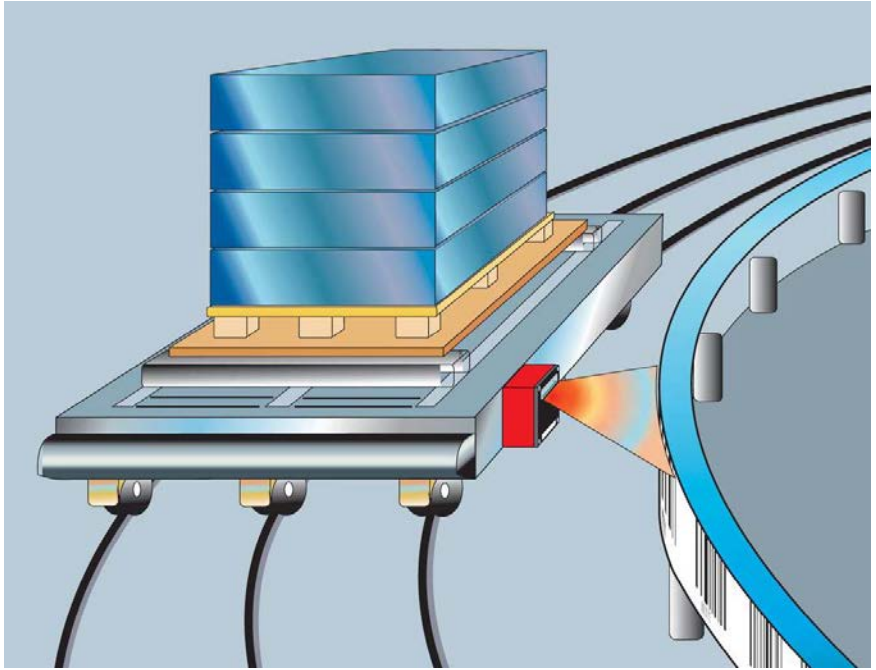

For AGV’s which follow both linear and non-linear paths the BE 90 is the Perfect Solution.

Entertainment

Elevator Positioning

Application Summary

- Automated Storage & Retrieval - Video
- Cart /Trolly Positioning
- Overhead Gantry Systems
- Stage, Theatre and Entertainment
- Pharmacuticals
- Paper and Printing
- Elevator Positioning
- Presence Detection

QUESTIONS?

TR ELECTRONIC™

. . . Passionate about Sensors.

Putting Our Customers First!

www.trelectronic.com

customercare@trelectronic.com

TR Electronic CUSTOMERS FIRST Program

Proud Member of: ODVA™ PMA PRECISION METALFORMING ASSOCIATION ISO 9001 QUALITY ASSURANCE PI PROFIBUS • PROFINET