Environmental conditions

Vibration, DIN EN 60068-2-6: 1996 ..... ≤ 100 m/s², sine 50-2000 Hz
Shock, DIN EN 60068-2-27: 1995..... ≤ 1000 m/s², half-sine 11 ms
EMC
- Immunity to disturbance, DIN EN 61000-6-2: 2006
- Transient emissions, DIN EN 61000-6-3: 2007

Operating Temperature..... 0° to 60°C (32°F to 140°F) (Option -20° to 70°C / -4°F to 158°F)
Extended Temperature (Optional) ..... -30° to +80°C (-22° to 176°F)
Relative humidity, DIN EN 60068-3-4: 2002 ..... 98 %, non condensing
Protection class, DIN EN 60529: 1991 *)..... IP 54

*) valid with screwed on mating connector and / or screwed together cable gland

Dimension drawing

(For project planning please request customized dimensional drawing!)

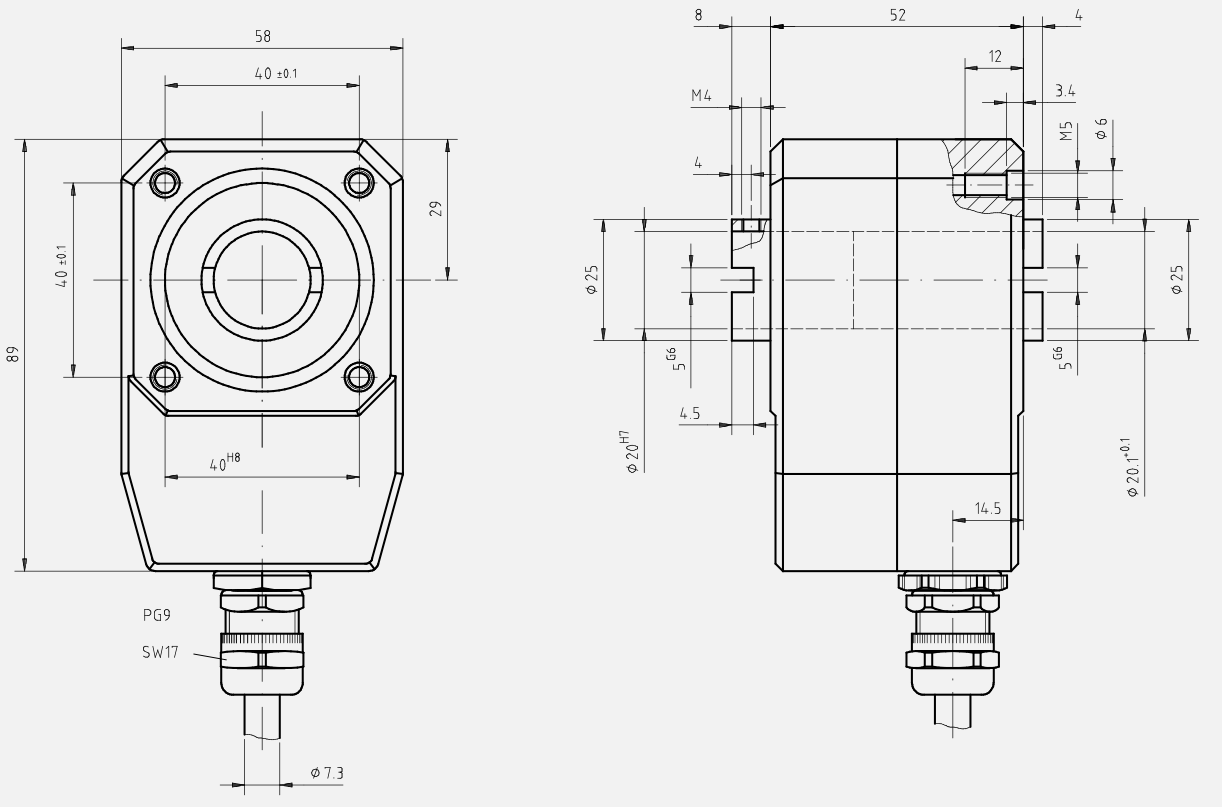

TR-Electronic GmbH
Eglishalde 6
78647 Trossingen
Tel. +49 7425 228-0
info@tr-electronic.de

Incremental-Encoder IE 24

+ Incremental interface
+ Type with solid shaft Ø 3…6 mm
+ Number of pulses per revolution 1…2.500
+ Small compact design

Characteristics

Supply voltage	11…27 VDC
5 VDC, ±5 %	on request
Current consumption without load	≤ 100 mA
Signal outputs	Square wave
Outputs (11-27 V level)	Push-Pull, short-circuit-proof
- Output current	≤ 20 mA
- Incremental signal, optional with inverting	K1, K2 phase-shifted 90° electrically
- Zero-pulse, optional with inverting	K0, 1x per revolution, length 90°, 180°, 360° electrically
- Output frequency	≤ 300 kHz
Outputs (5 V level)	Line driver
- Output current	≤ 20 mA
- Incremental signals, optional with inverting	K1, K2 phase-shifted 90° electrically
- Zero-pulse, optional with inverting	K0, 1x per revolution, length 90°, 180°, 360° electrically
- Output frequency	≤ 300 kHz
Mechanically permissible speed	≤ 10.000 min^{-1}
Shaft load, at shaft end	axial 10 N, radial 20 N
Connection	Cable outlet axial or radial, cable length on request
Mass	approx. 0.04 kg

TR-Electronic GmbH
Eglishalde 6
78647 Trossingen
Tel. +49 7425 228-0
info@tr-electronic.de

Environmental conditions

Vibration, DIN EN 60068-2-6: 1996 ..... ≤ 100 m/s², sine 20-2000 Hz
Shock, DIN EN 60068-2-27: 1995..... ≤ 1000 m/s², half-sine 11 ms
EMC
- Immunity to disturbance, DIN EN 61000-6-2: 2006
- Transient emissions, DIN EN 61000-6-3: 2007

Working temperature ..... 0 °C…+80 °C
Storage temperature ..... -30 °C…+80 °C, dry
Relative humidity, DIN EN 60068-3-4: 2002 ..... 98 %, non condensing
Protection class, DIN EN 60529: 1991 *) ..... IP 64 on shaft

*) valid with screwed on mating connector and / or screwed together cable gland

Dimension drawing

(For project planning please request customized dimensional drawing!)

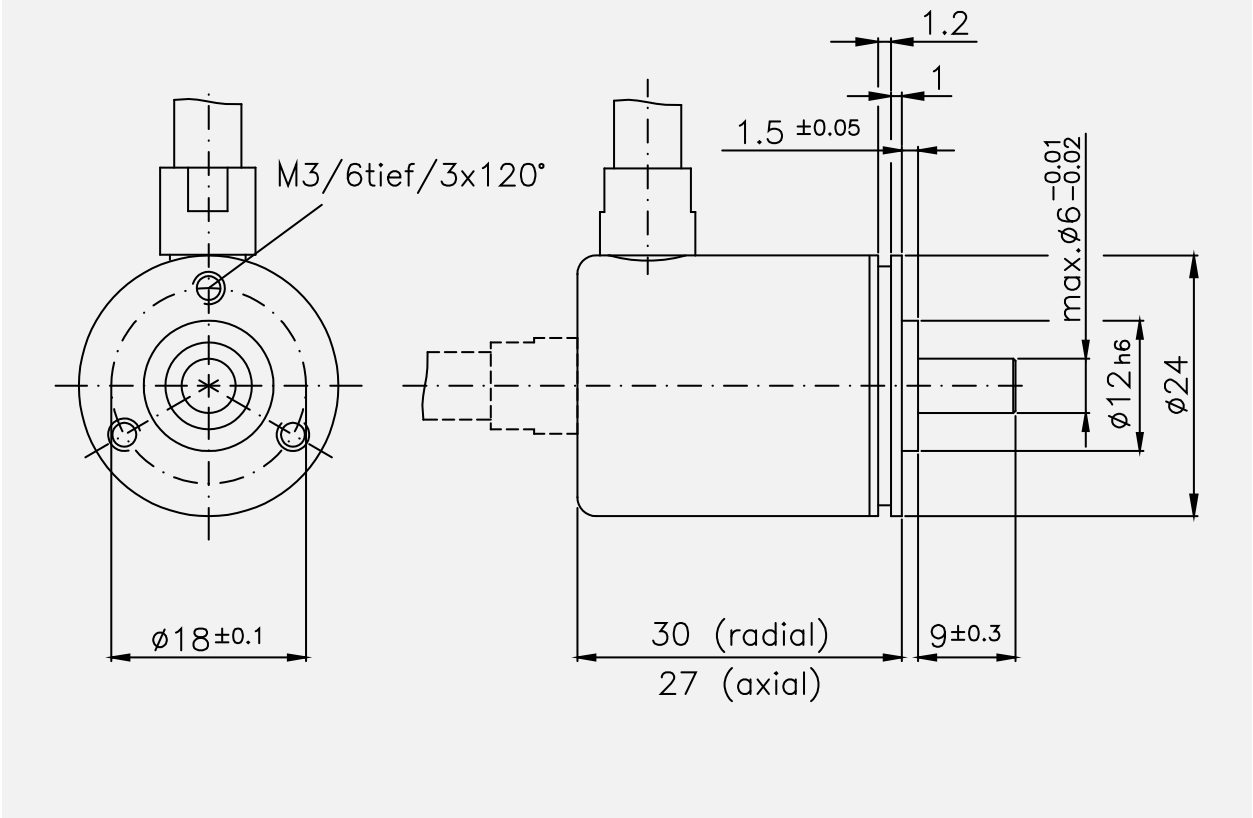

TR-Electronic GmbH
Eglishalde 6
78647 Trossingen
Tel. +49 7425 228-0
info@tr-electronic.de

Incremental-Encoder IE 35

+ Incremental interface
+ Small compact design (35 mm)
+ Universal applications
+ Number of pulses per revolution 1 to 3.600

Characteristics

Supply Voltage	11 - 27 V DC
5 VDC	Upon request
Power Dissipation (No Load)	< 2.5 Watt
Output (11-27 V)	Push-Pull
- Maximum Current	max. 20 mA
- Incremental Signal	A, A neg., B, B neg.
- Marker Pulse	Z, Z neg., 1 pulse per revolution
	Maximum Output Frequency160 kHz
Output (5 V)	Line Driver
- Maximum Current	max. 20 mA
- Incremental Signal	A, A neg., B; B neg.
- Marker Pulse	Z, Z neg., 1 pulse per revolution
	Maximum Output Frequency300 kHz
Tolerance (at 100 kHz)	
- Phase Shift	± 30°
- Pulse Width	± 30°
Number of Pulses Per Revolution	1 to 3.600
Maximum Rotational Speed	max. 12.000 RPM
Maximum Load on Shaft	10 N axial, 20 N radial (at end of shaft)
Maximum Angular Acceleration	$\leq 10^5$ rad/s^2
Momentum of Inertia	0.2 x 10^{-6} kg m^2
Startup Momentum 20°C (68° F)	0.01 Ncm
Connector	PG axial cable (pigtail), Different Cable Lengths on Request
Weight	0.2 kg (0.4 lb.)

TR-Electronic GmbH
Eglishalde 6
78647 Trossingen
Tel. +49 7425 228-0
info@tr-electronic.de

Environmental conditions

Vibration, DIN EN 60068-2-6: 1996 ..... ≤ 100 m/s², sine 50-2000 Hz
Shock, DIN EN 60068-2-27: 1995..... ≤ 1000 m/s², half-sine 11 ms
EMC
- Immunity to disturbance, DIN EN 61000-6-2: 2006
- Transient emissions, DIN EN 61000-6-3: 2007

Operating Temperature..... 0° to +80°C (32° to 176°F)
Extended Temperature (Optional) ..... -30° to +80°C (-22° to 176°F)
Relative humidity, DIN EN 60068-3-4: 2002 ..... 98 %, non condensing
Protection class, DIN EN 60529: 1991 *)..... IP 65

*) valid with screwed on mating connector and / or screwed together cable gland

Dimension drawing

(For project planning please request customized dimensional drawing!)

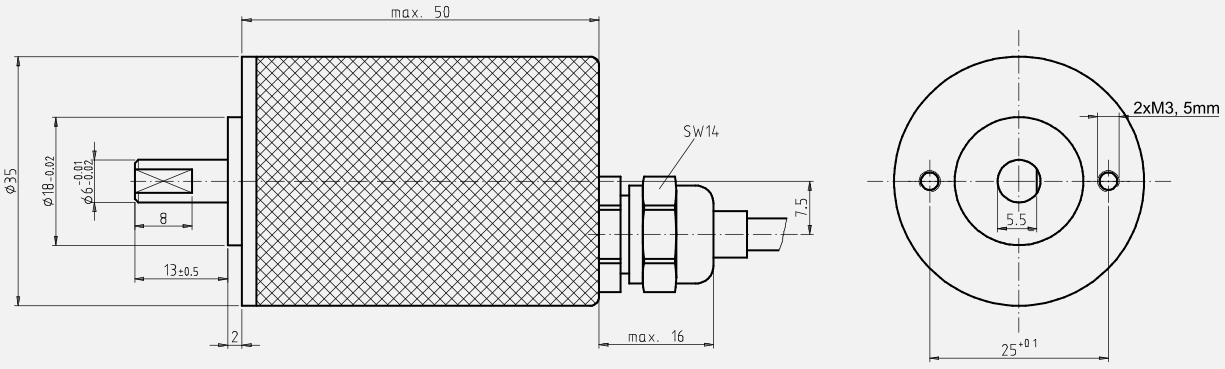

TR-Electronic GmbH
Eglishalde 6
78647 Trossingen
Tel. +49 7425 228-0
info@tr-electronic.de

Incremental-Encoder IMV 36

+ Incremental interface
+ Type with solid shaft
+ Number of pulses per revolution up to 2.048
+ Encapsulated electronics
+ Protection class up to IP 69K
+ Magnetic scanning technology

Characteristics

Supply voltage ..... 11…27 VDC, 5 VDC ±5 %
Current consumption without load ..... < 40 mA

Possible number of pulses/revolution:
- Binary 8, 16, 32, 64, 128, 256, 512, 1.024, 2.048
- Decimal 10, 20, 25, 40, 50, 80, 100, 125, 200, 250, 400, 500

Outputs, 11 … 27 VDC
- Incremental signals ..... K1, K1 neg, K2, K2 neg
- Zero pulse ..... K0, K0 neg, 1 pulse per revolution
- Output frequency ..... ≤ 150 kHz
- Supply voltage ..... 11 … 27 VDC

Outputs, 5 VDC
- Incremental signals ..... K1, K1 neg, K2, K2 neg
- Zero pulse ..... K0, K0 neg, 1 pulse per revolution
- Output frequency ..... ≤ 150 kHz
- Supply voltage ..... 11 … 27 VDC, 5 VDC

Mechanically permissible speed ..... ≤ 6.000 min^{-1}
Shaft load, at the shaft end ..... ≤ 5 N axial, ≤ 10 N radial
Bearing life time ..... ≥ 3.9 * 10^9 revolutions at
- Speed ..... ≤ 3.000 min^{-1}
- Operating temperature ..... ≤ 60 °C
- Shaft load, at the shaft end ..... ≤ 5 N axial, ≤ 10 N radial

Permissible angular acceleration ..... ≤ 10^4 rad/s^2
Moment of inertia ..... typically 2.5 * 10^{-6} kg m^2
Start-up torque at 20°C ..... typically 2 Ncm
Connection ..... axial cable outlet
Mass ..... 0.15 kg

TR-Electronic GmbH
Eglishalde 6
78647 Trossingen
Tel. +49 7425 228-0
info@tr-electronic.de

Environmental conditions

Vibration, DIN EN 60068-2-6 ..... ≤ 100 m/s², sine 50-2000 Hz
Shock, DIN EN 60068-2-27..... ≤ 1000 m/s², half-sine 11ms
EMC
- Immunity to disturbance, DIN EN 61000-6-2
- Transient emissions, DIN EN 61000-6-3

Working temperature ..... -25 °C…+70 °C
Storage temperature ..... -20 °C…+85 °C, dry
Relative humidity, DIN EN 60068-3-4 ..... 98 %
Protection class, DIN EN 60529..... IP 65
- Option DIN 40050-9..... IP 69K

Dimension drawing

(For project planning please request customized dimensional drawing!)

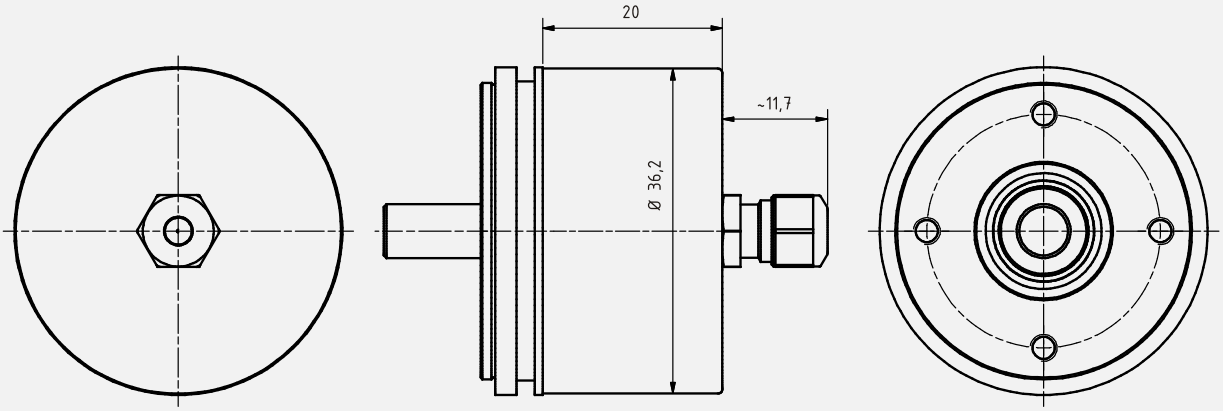

Vollständige Abmaße siehe konkrete Art.-Nr. /
Complete dimensions see specific part number

TR-Electronic GmbH
Eglishalde 6
78647 Trossingen
Tel. +49 7425 228-0
info@tr-electronic.de

Incremental-Encoder IMF 36

+ Incremental interface
+ Bearing free
+ Number of pulses per revolution up to 2.048
+ Encapsulated electronics
+ Protection class up to IP 69K
+ Magnetic scanning technology

Characteristics

Supply voltage ..... 11…27 VDC, 5 VDC ±5 %
Current consumption without load ..... < 40 mA

Possible number of pulses/revolution:
- Binary 8, 16, 32, 64, 128, 256, 512, 1.024, 2.048
- Decimal 10, 20, 25, 40, 50, 80, 100, 125, 200, 250, 400, 500

Outputs, 11 … 27 VDC
- Incremental signals ..... K1, K1 neg, K2, K2 neg
- Zero pulse ..... K0, K0 neg, 1 pulse per revolution
- Output frequency ..... ≤ 150 kHz
- Supply voltage ..... 11 … 27 VDC

Outputs, 5 VDC
- Incremental signals ..... K1, K1 neg, K2, K2 neg
- Zero pulse ..... K0, K0 neg, 1 pulse per revolution
- Output frequency ..... ≤ 150 kHz
- Supply voltage ..... 11 … 27 VDC, 5 VDC

Concentricity tolerance [1] ..... 0.2 mm
Permissible axial backlash [1] ..... ± 0.15 mm

Connection ..... axial cable outlet
Mass ..... 0.15 kg

[1] see reference lines in the dimension drawing

TR-Electronic GmbH
Eglishalde 6
78647 Trossingen
Tel. +49 7425 228-0
info@tr-electronic.de

Environmental conditions

Vibration, DIN EN 60068-2-6 ..... ≤ 100 m/s², sine 50-2000 Hz
Shock, DIN EN 60068-2-27..... ≤ 1000 m/s², half-sine 11ms
EMC
- Immunity to disturbance, DIN EN 61000-6-2
- Transient emissions, DIN EN 61000-6-3

Working temperature ..... -25 °C...+70 °C
Storage temperature ..... -20 °C...+85 °C, dry
Relative humidity, DIN EN 60068-3-4 ..... 98 %
Protection class, DIN EN 60529..... IP 65
- Option DIN 40050-9..... IP 69K

Dimension drawing

(For project planning please request customized dimensional drawing!)

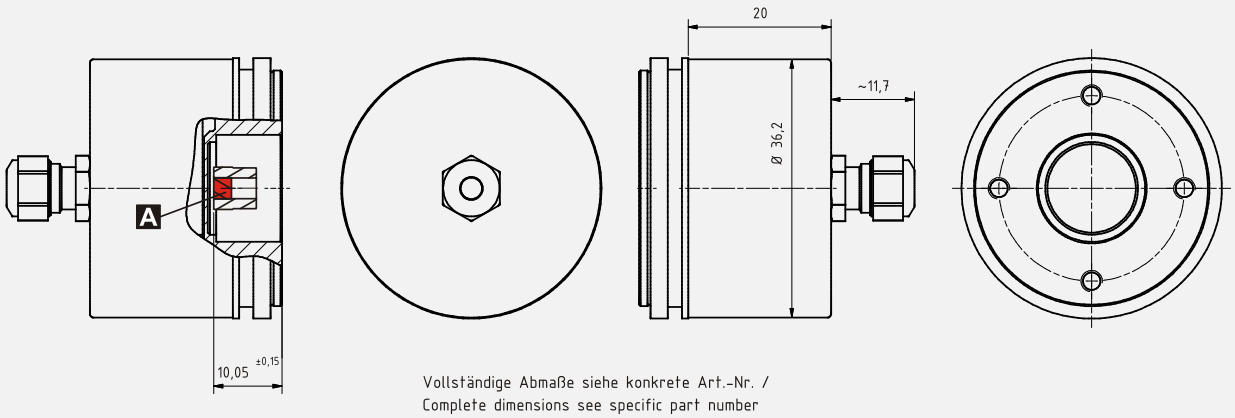

Vollständige Abmaße siehe konkrete Art.-Nr. /
Complete dimensions see specific part number

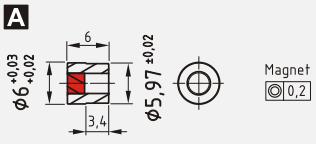

Beispiel für Magnethalter!
Dargestellter Magnethalter für stirnseitige Bohrung 6h7, 7mm tief, Best.-Nr.: 49-150-092
Nicht im Lieferumfang enthalten, bitte separat bestellen.
Magnethalter in anderen Dimensionen werden nach Kundenspezifikation konstruiert und geliefert. /

Magnet holder, example!
This magnet holder is fitting for a bore 6h7, 7mm deep in the front side of the shaft. Order no.: 49-150-092
Magnet holder must be ordered separately.
Magnet holders in other dimensions are designed and supplied customized.

TR-Electronic GmbH
Eglishalde 6
78647 Trossingen
Tel. +49 7425 228-0
info@tr-electronic.de

Incremental-Encoder IE 40

TR-VCE-TI-GB-0560
04/12 Revision 02
010101-00409999-9999

+ Incremental interface
+ Type with solid shaft ∅ 4…6 mm
+ Number of pulses per revolution 1…3.600
+ Small compact design
+ Universal applications

Characteristics

Supply voltage	11…27 VDC
5 VDC, ±5 %	on request
Current consumption without load	≤ 100 mA
Signal outputs	Square wave
Outputs (11-27 V level)	Push-Pull, short-circuit-proof
- Output current	≤ 20 mA
- Incremental signal, optional with inverting	K1, K2 phase-shifted 90° electrically
- Zero-pulse, optional with inverting	K0, 1x per revolution, length 90°, 180°, 360° electrically
- Output frequency	≤ 160 kHz
Outputs (5 V level)	Line driver
- Output current	≤ 20 mA
- Incremental signals, optional with inverting	K1, K2 phase-shifted 90° electrically
- Zero-pulse, optional with inverting	K0, 1x per revolution, length 90°, 180°, 360° electrically
- Output frequency	≤ 300 kHz
Mechanically permissible speed	≤ 10.000 min^{-1}
Shaft load, at shaft end	axial 10 N, radial 20 N
Connection	Cable outlet radial, cable length on request
Mass	approx. 0.2 kg

TR-Electronic GmbH
Eglishalde 6
78647 Trossingen
Tel. +49 7425 228-0
info@tr-electronic.de

Environmental conditions

Vibration, DIN EN 60068-2-6: 1996 ..... ≤ 100 m/s², sine 20-2000 Hz
Shock, DIN EN 60068-2-27: 1995..... ≤ 1000 m/s², half-sine 11ms
EMC
- Immunity to disturbance, DIN EN 61000-6-2: 2006
- Transient emissions, DIN EN 61000-6-3: 2007

Working temperature ..... 0 °C…+80 °C
Storage temperature ..... -30 °C…+80 °C, dry
Relative humidity, DIN EN 60068-3-4: 2002 ..... 98 %, non condensing
Protection class, DIN EN 60529: 1991 *) ..... IP 65

*) valid with screwed on mating connector and / or screwed together cable gland

Dimension drawing

(For project planning please request customized dimensional drawing!)

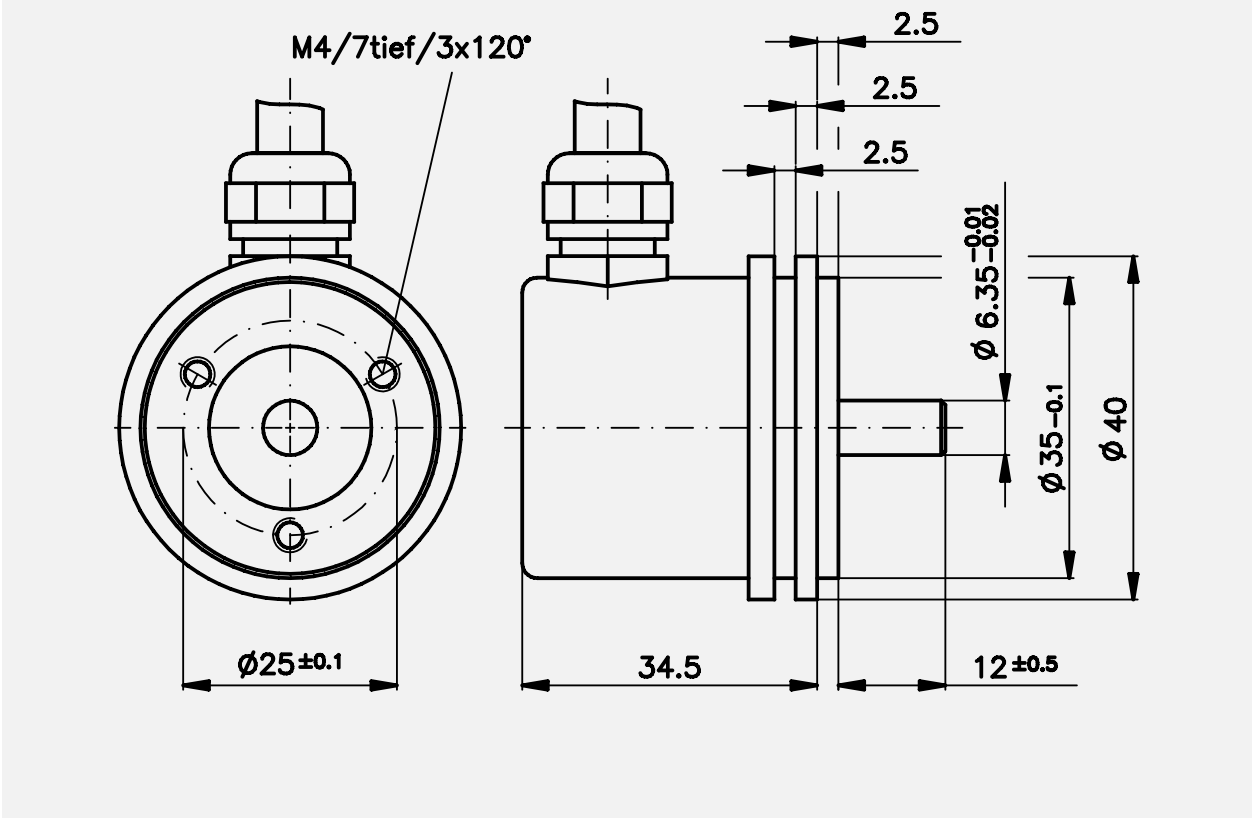

TR-Electronic GmbH
Eglishalde 6
78647 Trossingen
Tel. +49 7425 228-0
info@tr-electronic.de

Incremental-Encoder IE 58 A

+ Incremental interface
+ Small compact design
+ Universal applications
+ Number of pulses per revolution 1 to 10 000

Characteristics

Supply Voltage	11-27 V DC or 5 VDC
Power Dissipation (No Load)	< 4 Watt
Output (11-27 V)	Push-Pull
- Maximum Current	max. 30 mA
- Incremental Signal	A, A neg., B, B neg. Channel A leads channel B when rotating in a clockwise direction.
- Marker Pulse	Z, Z neg., 1 pulse per revolution
- Output Frequency	< 1000 PPR = 30 kHz, > 1000 PPR = 160 kHz
- Rise Time of Edge	< 500 ns
Output (5 V)	Line Driver
- Maximum Current	max. 50 mA
- Incremental Signal	A, A neg., B; B neg. Channel A leads channel B when rotating in a clockwise direction.
- Marker Pulse	Z, Z neg., 1 pulse per revolution
- Output Frequency	< 1000 PPR = 100 kHz, > 1000 PPR = 300 kHz
- Rise Time of Edge	< 100 ns
Maximum Revolutions per Minute (RPM)	(Output Frequency [Hz] / PPR) x 60 seconds
Number of Pulses Per Revolution	1 – 10 000
Maximum Rotational Speed	6000 RPM
Maximum Load on Shaft	10 N axial, 20 N radial (at end of shaft)
Lifetime on Bearings	3.9×10^{10} Revolutions at:
- Operational Speed	3000 RPM
- Operating Temperature	60 °C
Maximum Angular Acceleration	$\leq 10^4$ rad/s^2
Momentum of Inertia	2.5×10^{-6} kg m^2
Startup Momentum 20°C (68° F)	2 Ncm
Standard Connector	PG 9 axial cable (pigtail), Different Cable Lengths on Request
Further Types of Connections / Connector Types	Upon Request
Weight	0.3 kg (0.7 lb.)

TR-Electronic GmbH
Eglishalde 6
78647 Trossingen
Tel. +49 7425 228-0
info@tr-electronic.de

Environmental conditions

Vibration, DIN EN 60068-2-6: 1996 ..... ≤ 100 m/s², sine 50-2000 Hz
Shock, DIN EN 60068-2-27: 1995..... ≤ 1000 m/s², half-sine 11 ms
EMC
- Immunity to disturbance, DIN EN 61000-6-2: 2006
- Transient emissions, DIN EN 61000-6-3: 2007

Operating Temperature..... 0° to 70°C (32°F to 158°F) (Option -20° to +70°C) (-4°F to 158°F)
Extended Temperature (Optional) ..... -30° to +80°C (-22° to 176°F)
Relative humidity, DIN EN 60068-3-4: 2002 ..... 98 %, non condensing
Protection class, DIN EN 60529: 1991 *)..... IP 65

*) valid with screwed on mating connector and / or screwed together cable gland

Dimension drawing

(For project planning please request customized dimensional drawing!)

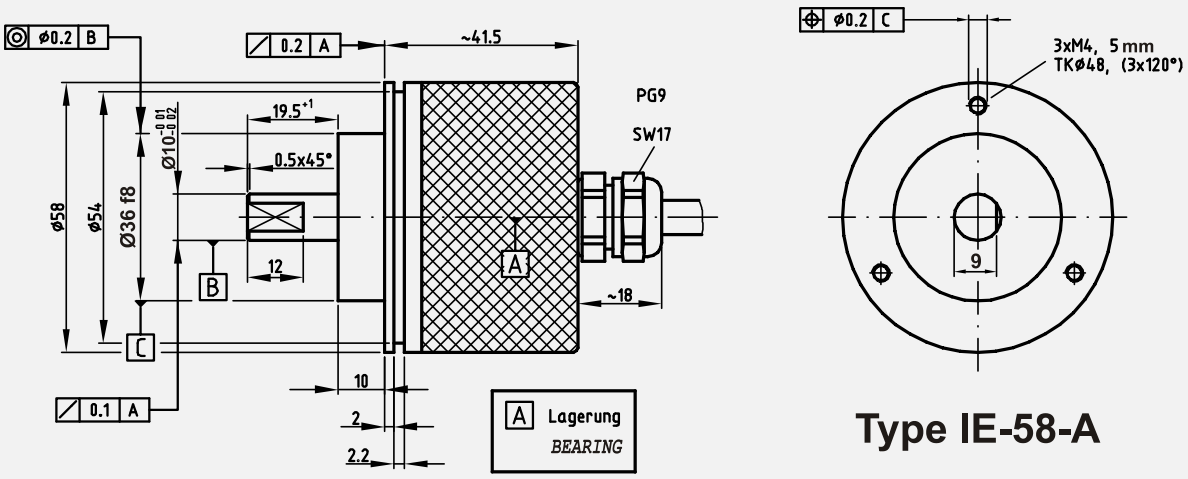

Weitere Anschlussvarianten (radial), Steckerausführungen auf Anfrage /
Further types of connections (radial), type of connectors upon request

TR-Electronic GmbH
Eglishalde 6
78647 Trossingen
Tel. +49 7425 228-0
info@tr-electronic.de

Incremental-Encoder IE 58 B

+ Incremental interface
+ Type with solid shaft
+ Small compact design
+ Universal applications
+ Number of pulses per revolution up to 5.000, others upon request

Characteristics

Supply Voltage	11 - 27 V DC or 5V DC
Power Dissipation (No Load)	< 0,8 Watt
Output (11-27 V)	Push-Pull
- Maximum Current	30 mA
- Incremental Signal	A, A neg., B, B neg. Channel A leads channel B when rotating in a clockwise direction
- Marker Pulse (option)	Z, Z neg., 1 pulse per revolution
- Cut-Off Frequency	160 kHz
- Rise Time of Edge	< 500 ns
Output (5 V)	Line Driver
- Maximum Current	50 mA
- Incremental Signal	A, A neg., B; B neg. Channel A leads channel B when rotating in a clockwise direction
- Marker Pulse (option)	Z, Z neg., 1 pulse per revolution
- Cut-Off Frequency	> 300 kHz
- Rise Time of Edge	< 100 ns
Maximum Revolutions per Minute (RPM)	(Cut-Off Frequency [Hz] / PPR) x 60 min^{-1}
Number of Pulses Per Revolution	7, 10, 18, 20, 32, 40, 50, 60, 64, 100, 125, 128, 180, 200, 250, 300, 360, 360, 400, 440, 500, 512, 700, 900, 1000, 1024, 1250, 1500, 1885, 2000, 2048, 2500, 2600, 3600, 4000, 4096, 5000 further on request
Maximum Rotational Speed	12.000 min^{-1}
Maximum Load on Shaft	10 N axial, 20 N radial (at end of shaft)
Lifetime on Bearings	min. 3,9 x 10^{10} revolutions at:
- Operational Speed	6.000 min^{-1}
- Operating Temperature	60°C
Maximum Angular Acceleration	$\leq 10^4$ rad/s^2
Momentum of Inertia	approx. 2,5 x 10^{-6} kg m^2
Startup Momentum at 20°C (68°F)	approx. 2 Ncm
Standard Connection	12 pin Contact-Bullet-Connector, radial
Further Types of Connections / Connector Types	Upon Request
Weight	approx. 0,3 kg

TR-Electronic GmbH
Eglishalde 6
78647 Trossingen
Tel. +49 7425 228-0
info@tr-electronic.de

Environmental conditions

Vibration, DIN EN 60068-2-6: 1996 ..... ≤ 100 m/s², sine 59-2000 Hz
Shock, DIN EN 60068-2-27: 1995..... ≤ 1000 m/s², half-sine 11 ms
EMC
- Immunity to disturbance, DIN EN 61000-6-2: 2006
- Transient emissions, DIN EN 61000-6-3: 2007

Operating Temperature..... - 20 to + 85°C
Storage Temperature..... - 30 to + 80°C
Relative humidity, DIN EN 60068-3-4: 2002 ..... 98 %, non condensing
Protection class, DIN EN 60529: 1991 *)..... IP 67

*) valid with screwed on mating connector and / or screwed together cable gland

Dimension drawing

(For project planning please request customized dimensional drawing!)

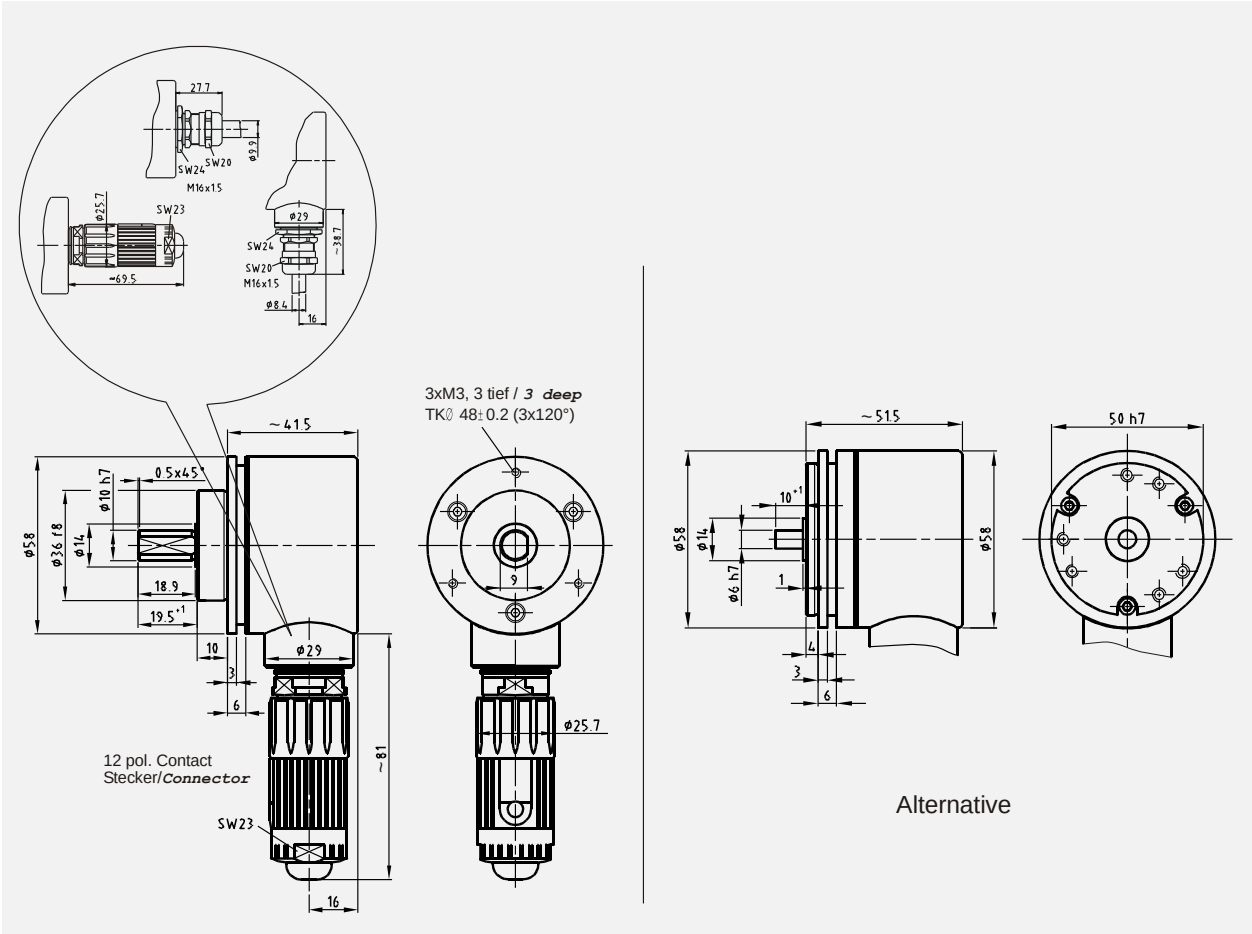

TR-Electronic GmbH
Eglishalde 6
78647 Trossingen
Tel. +49 7425 228-0
info@tr-electronic.de

Incremental-Encoder IE 58 U

+ Incremental interface
+ Type with solid shaft
+ Small compact design
+ Universal applications
+ Number of pulses per revolution up to 4.096, others upon request

Characteristics

Supply Voltage	11-27 V DC or 5V DC
Power Dissipation (No Load)	< 0,8 Watt
Output (11-27 V)	Push-Pull
- Maximum Current	30 mA
- Incremental Signal	A, A neg., B, B neg. Channel A leads channel B when rotating in a clockwise direction
- Marker Pulse (option)	Z, Z neg., 1 pulse per revolution
- Cut-Off Frequency	160 kHz
- Rise Time of Edge	< 500 ns
Output (5 V)	Line Driver
- Maximum Current	50 mA
- Incremental Signal	A, A neg., B; B neg. Channel A leads channel B when rotating in a clockwise direction
- Marker Pulse (option)	Z, Z neg., 1 pulse per revolution
- Cut-Off Frequency	> 300 kHz
- Rise Time of Edge	< 100 ns
Maximum Revolutions per Minute (RPM)	(Cut-Off Frequency [Hz] / PPR) x 60 min^{-1}
Number of Pulses Per Revolution	7, 10, 18, 20, 32, 40, 50, 60, 64, 100, 125, 128, 180, 200, 250, 300, 360, 360, 400, 440, 500, 512, 700, 900, 1000, 1024, 1250, 1500, 1885, 2000, 2048, 2500, 2600, 3600, 4000, 4096 further on request
Maximum Rotational Speed	12.000 min^{-1}
Maximum Load on Shaft	10 N axial, 20 N radial (at end of shaft)
Lifetime on Bearings	min. 3,9 x 10^{10} revolutions at:
- Operational Speed	6.000 min^{-1}
- Operating Temperature	60°C
Maximum Angular Acceleration	$\leq 10^4$ rad/s^2
Momentum of Inertia	approx. 2,5 x 10^{-6} kg m^2
Startup Momentum at 20°C (68°F)	approx. 2 Ncm
Standard Connection	12 pin Contact-Bullet-Connector, radial
Further Types of Connections / Connector Types	Upon Request
Weight	approx. 0,3 kg

TR-Electronic GmbH
Eglishalde 6
78647 Trossingen
Tel. +49 7425 228-0
info@tr-electronic.de

Environmental conditions

Vibration, DIN EN 60068-2-6: 1996 ..... ≤ 100 m/s², sine 59-2000 Hz
Shock, DIN EN 60068-2-27: 1995..... ≤ 1000 m/s², half-sine 11 ms
EMC
- Immunity to disturbance, DIN EN 61000-6-2: 2006
- Transient emissions, DIN EN 61000-6-3: 2007

Operating Temperature..... - 20 to + 85°C
Storage Temperature..... - 30 to + 80°C
Relative humidity, DIN EN 60068-3-4: 2002 ..... 98 %, non condensing
Protection class, DIN EN 60529: 1991 *)..... IP 67

*) valid with screwed on mating connector and / or screwed together cable gland

Dimension drawing

(For project planning please request customized dimensional drawing!)

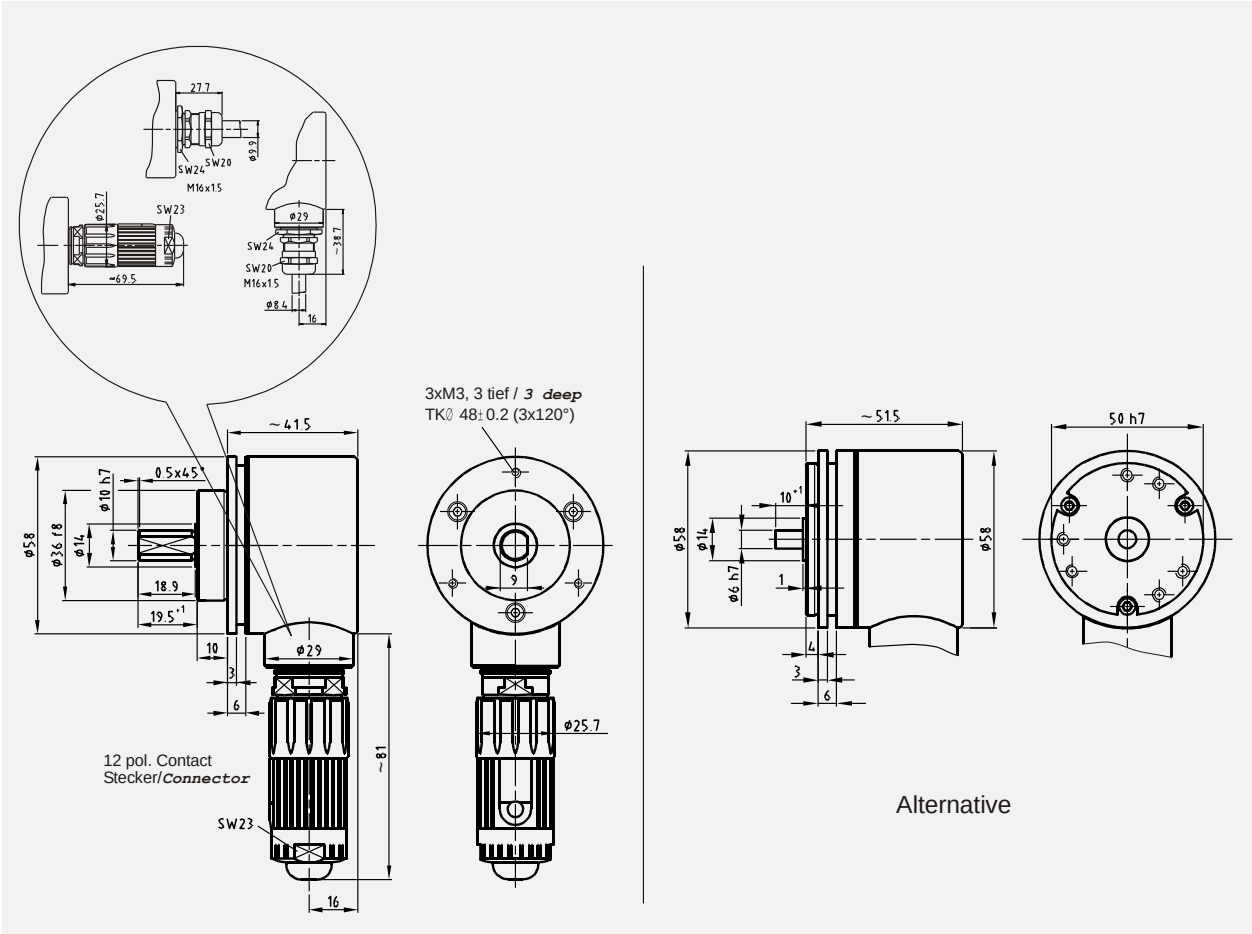

TR-Electronic GmbH
Eglishalde 6
78647 Trossingen
Tel. +49 7425 228-0
info@tr-electronic.de

Incremental-Encoder IH 58 A

+ Incremental interface
+ Hollow shaft encoder for direct coupling to any drive shaft (Ø 4 ... 12 mm)
+ Number of pulses per revolution up to 10.000

Characteristics

Supply Voltage	11 - 27 V DC or 5 V DC
Output (11-27 V)	Push-Pull
- Maximum Current	max. 20 mA
- Incremental Signal	A, A neg., B, B neg.
- Marker Pulse	Z, Z neg., 1 pulse per revolution
- Maximum Output Frequency	160 kHz
Output (5 V)	Line Driver
- Maximum Current	max. 20 mA
- Incremental Signal	A, A neg., B; B neg.
- Marker Pulse	Z, Z neg., 1 pulse per revolution
- Maximum Output Frequency	300 kHz
Tolerance (at 20 kHz)	
- Phase Shift	± 10°
- Pulse Width	± 10°
Tolerance (at 100 kHz)	
- Phase Shift	± 30°
- Pulse Width	± 30°
Pulses per Revolution	1 to 10 000
Option	Sinusoidal Signal, 160 kHz (-3dB), voltage or current source 5 or 10 times the base PPR is possible. (i.e. 50000 or 100000 PPR)
Maximum Rotational Speed	10.000 RPM
Maximum Angular Acceleration	≤ 10^5 rad/s^2
Momentum of Inertia	1.5 x 10^{-6} kg m^2
Startup Momentum 20°C (68° F)	approx. 0.02 Nm
Weight	0.3 kg (.7 lb.)

TR-Electronic GmbH
Eglishalde 6
78647 Trossingen
Tel. +49 7425 228-0
info@tr-electronic.de

Environmental conditions

Vibration, DIN EN 60068-2-6: 1996 ..... ≤ 100 m/s², sine 50-2000 Hz
Shock, DIN EN 60068-2-27: 1995..... ≤ 1000 m/s², half-sine 11 ms
EMC
- Immunity to disturbance, DIN EN 61000-6-2: 2006
- Transient emissions, DIN EN 61000-6-3: 2007

Operating Temperature..... 0° to 80°C (32° F to 176° F)
Extended Temperature (Optional) ..... -30° to +80°C (-22° to 176°F)
Relative humidity, DIN EN 60068-3-4: 2002 ..... 98 %, non condensing
Protection class, DIN EN 60529: 1991 *)..... max. IP 64, dependent on the connector or the connection technique

*) valid with screwed on mating connector and / or screwed together cable gland

Dimension drawing

(For project planning please request customized dimensional drawing!)

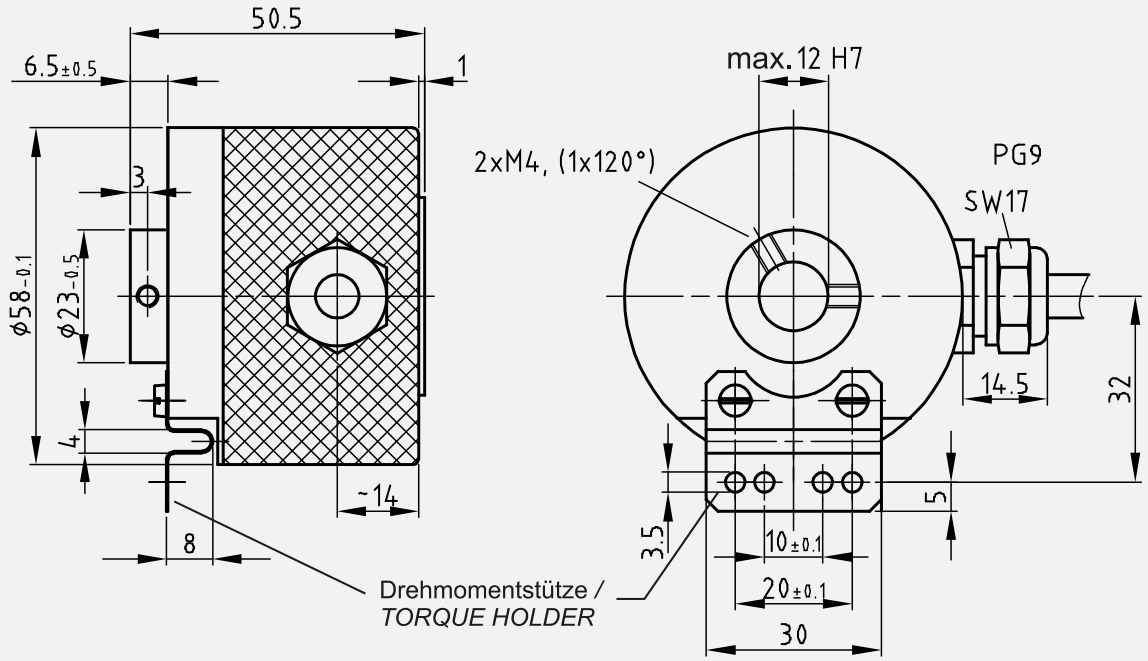

TR-Electronic GmbH
Eglishalde 6
78647 Trossingen
Tel. +49 7425 228-0
info@tr-electronic.de

Incremental-Encoder IH 58 U

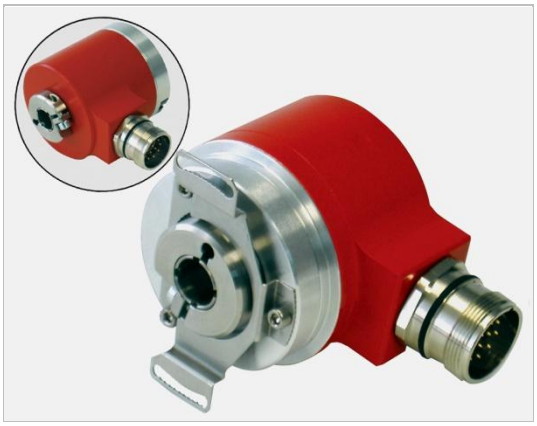

+ Incremental interface
+ Type with hollow through shaft Ø 8, 10 or 12 mm
+ Small compact design
+ Universal applications
+ Number of pulses per revolution up to 4.096, others upon request

Characteristics

Supply Voltage	11 - 27 V DC or 5 V DC
Power Dissipation (No Load)	< 0,8 Watt
Output (11-27 V)	Push-Pull
- Maximum Current	30 mA
- Incremental Signal	A, A neg., B, B neg. Channel A leads channel B when rotating in a clockwise direction
- Marker Pulse (option)	Z, Z neg., 1 pulse per revolution
- Cut-Off Frequency	160 kHz
- Rise Time of Edge	< 500 ns
Output (5 V)	Line Driver
- Maximum Current	50 mA
- Incremental Signal	A, A neg., B; B neg. Channel A leads channel B when rotating in a clockwise direction
- Marker Pulse (option)	Z, Z neg., 1 pulse per revolution
- Cut-Off Frequency	> 300 kHz
- Rise Time of Edge	< 100 ns
Maximum Revolutions per Minute (RPM)	(Cut-Off Frequency [Hz] / PPR) x 60 min^{-1}
Number of Pulses Per Revolution	7, 10, 18, 20, 32, 40, 50, 60, 64, 100, 125, 128, 180, 200, 250, 300, 360, 360, 400, 440, 500, 512, 700, 900, 1000, 1024, 1250, 1500, 1885, 2000, 2048, 2500, 2600, 3600, 4000, 4096 further on request
Maximum Rotational Speed	6.000 min^{-1}
Maximum Load on Shaft	Own Mass
Lifetime on Bearings	min. 3,9 x 10^{10} revolutions at: 6.000 min^{-1} and 60°C
Maximum Angular Acceleration	$\leq 10^4$ rad/s^2
Momentum of Inertia	approx. 2,5 x 10^{-6} kg m^2
Startup Momentum at 20°C (68°F)	approx. 3,7 Ncm
Weight	approx. 0,3 kg

TR-Electronic GmbH
Eglishalde 6
78647 Trossingen
Tel. +49 7425 228-0
info@tr-electronic.de

Environmental conditions

Vibration, DIN EN 60068-2-6: 1996 ..... ≤ 100 m/s², sine 59-2000 Hz
Shock, DIN EN 60068-2-27: 1995..... ≤ 1000 m/s², half-sine 11 ms
EMC
- Immunity to disturbance, DIN EN 61000-6-2: 2006
- Transient emissions, DIN EN 61000-6-3: 2007

Operating Temperature..... -20 to +85°C
Storage Temperature..... -30 to +80°C
Relative humidity, DIN EN 60068-3-4: 2002 ..... 98 %, non condensing
Protection class, DIN EN 60529: 1991 *)..... IP 64

*) valid with screwed on mating connector and / or screwed together cable gland

Dimension drawing

(For project planning please request customized dimensional drawing!)

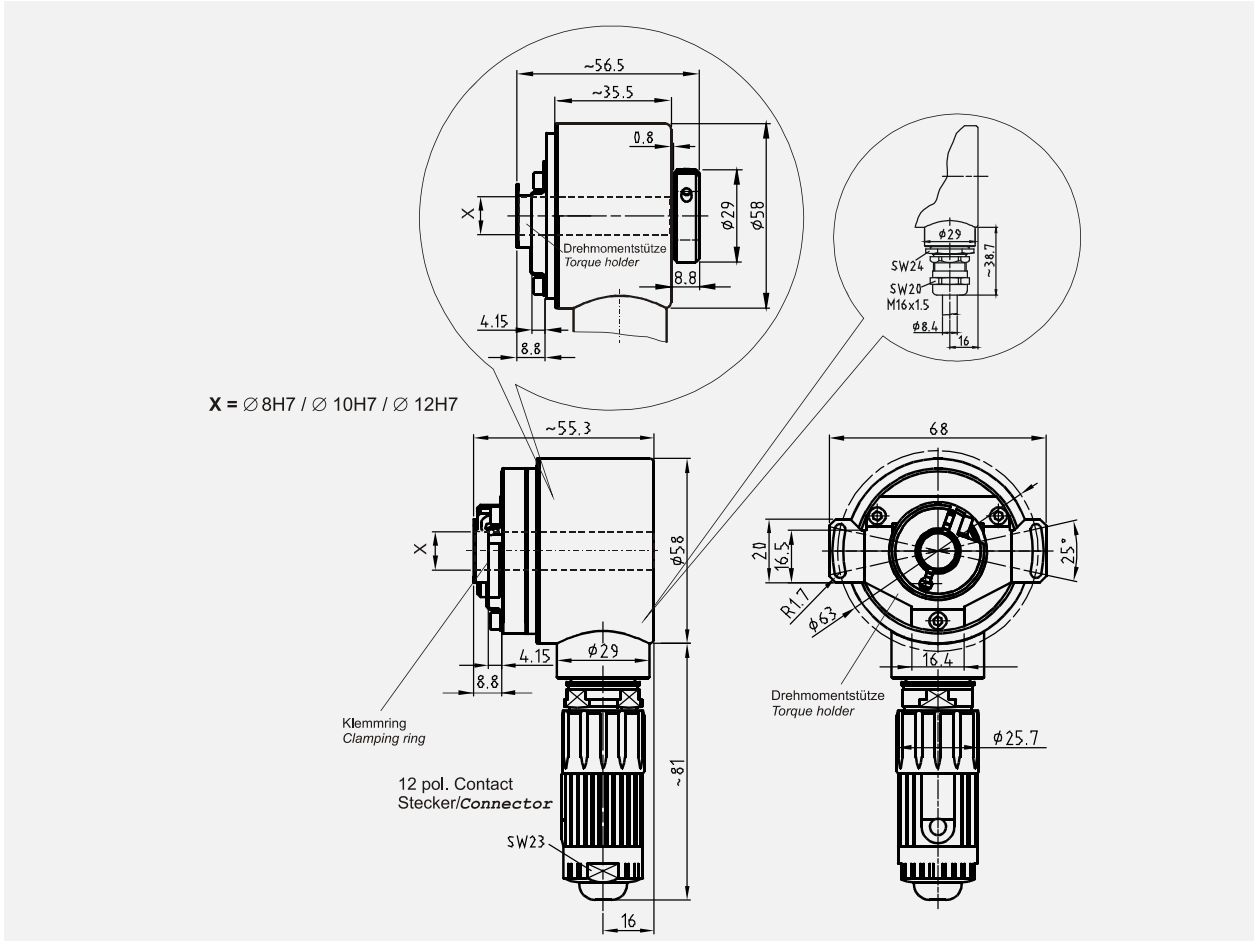

TR-Electronic GmbH
Eglishalde 6
78647 Trossingen
Tel. +49 7425 228-0
info@tr-electronic.de

Incremental-Encoder IS 58 U

+ Incremental interface
+ Type with stub-shaft-mounting ∅ 8, 10 or 12 mm
+ Small compact design
+ Universal applications
+ Number of pulses per revolution up to 4.096, others upon request

Characteristics

Supply Voltage	11 - 27 V DC or 5 V DC
Power Dissipation (No Load)	< 0,8 Watt
Output (11-27 V)	Push-Pull
- Maximum Current	30 mA
- Incremental Signal	A, A neg., B, B neg. Channel A leads channel B when rotating in a clockwise direction
- Marker Pulse (option)	Z, Z neg., 1 pulse per revolution
- Cut-Off Frequency	160 kHz
- Rise Time of Edge	< 500 ns
Output (5 V)	Line Driver
- Maximum Current	50 mA
- Incremental Signal	A, A neg., B; B neg. Channel A leads channel B when rotating in a clockwise direction
- Marker Pulse (option)	Z, Z neg., 1 pulse per revolution
- Cut-Off Frequency	> 300 kHz
- Rise Time of Edge	< 100 ns
Maximum Revolutions per Minute (RPM)	(Cut-Off Frequency [Hz] / PPR) x 60 min^{-1}
Number of Pulses Per Revolution	7, 10, 18, 20, 32, 40, 50, 60, 64, 100, 125, 128, 180, 200, 250, 300, 360, 360, 400, 440, 500, 512, 700, 900, 1000, 1024, 1250, 1500, 1885, 2000, 2048, 2500, 2600, 3600, 4000, 4096 further on request
Maximum Rotational Speed	12.000 min^{-1}
Maximum Load on Shaft	Own Mass
Lifetime on Bearings	min. 3,9 x 10^{10} revolutions at:
- Operational Speed	6.000 min^{-1}
- Operating Temperature	60°C
Maximum Angular Acceleration	≤ 10^4 rad/s^2
Momentum of Inertia	approx. 2,5 x 10^{-6} kg m^2
Startup Momentum at 20°C (68°F)	approx. 2 Ncm
Standard Connection	12 pin Contact-Bullet-Connector, radial
Further Types of Connections / Connector Types	Upon Request
Weight	approx. 0,3 kg

TR-Electronic GmbH
Eglishalde 6
78647 Trossingen
Tel. +49 7425 228-0
info@tr-electronic.de

Environmental conditions

Vibration, DIN EN 60068-2-6: 1996 ..... ≤ 100 m/s², sine 59-2000 Hz
Shock, DIN EN 60068-2-27: 1995..... ≤ 1000 m/s², half-sine 11 ms
EMC
- Immunity to disturbance, DIN EN 61000-6-2: 2006
- Transient emissions, DIN EN 61000-6-3: 2007

Operating Temperature..... -20 to +85°C
Storage Temperature..... -30 to +80°C
Relative humidity, DIN EN 60068-3-4: 2002 ..... 98 %, non condensing
Protection class, DIN EN 60529: 1991 *)..... IP 67

*) valid with screwed on mating connector and / or screwed together cable gland

Dimension drawing

(For project planning please request customized dimensional drawing!)

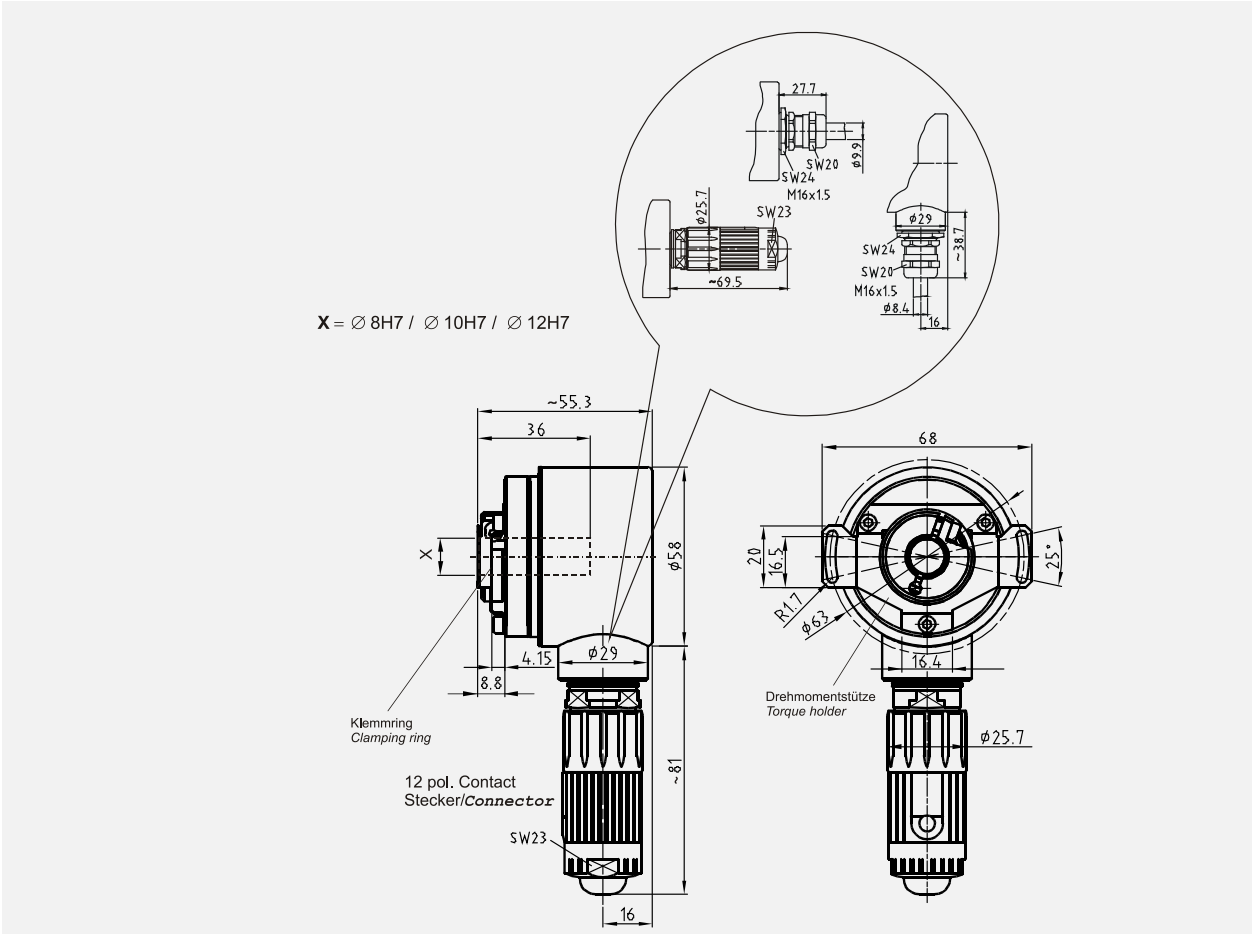

TR-Electronic GmbH
Eglishalde 6
78647 Trossingen
Tel. +49 7425 228-0
info@tr-electronic.de

Incremental-Encoder IK 58 U

+ Incremental interface
+ Type with integrated coupling
+ Small compact design
+ Universal applications
+ Number of pulses per revolution up to 4.096, others upon request

Characteristics

Supply Voltage	11 - 27 V DC or 5 V DC
Power Dissipation (No Load)	< 0,8 Watt
Output (11-27 V)	Push-Pull
Maximum Current	30 mA
- Incremental Signal	A, A neg., B, B neg. Channel A leads channel B when rotating in a clockwise direction
- Marker Pulse (option)	Z, Z neg., 1 pulse per revolution
- Cut-Off Frequency	160 kHz
- Rise Time of Edge	< 500 ns
Output (5 V)	Line Driver
- Maximum Current	50 mA
- Incremental Signal	A, A neg., B; B neg. Channel A leads channel B when rotating in a clockwise direction
- Marker Pulse (option)	Z, Z neg., 1 pulse per revolution
- Cut-Off Frequency	> 300 kHz
- Rise Time of Edge	< 100 ns
Maximum Revolutions per Minute (RPM)	(Cut-Off Frequency [Hz] / PPR) x 60 min^{-1}
Number of Pulses Per Revolution	7, 10, 18, 20, 32, 40, 50, 60, 64, 100, 125, 128, 180, 200, 250, 300, 360, 360, 400, 440, 500, 512, 700, 900, 1000, 1024, 1250, 1500, 1885, 2000, 2048, 2500, 2600, 3600, 4000, 4096 further on request
Maximum Rotational Speed	12.000 min^{-1}
Maximum Load on Shaft	Radial Coupling Forces
Lifetime on Bearings	min. 3,9 x 10^{10} revolutions at:
- Operational Speed	6.000 min^{-1}
- Operating Temperature	60°C
Maximum Angular Acceleration	$\leq 10^4$ rad/s^2
Momentum of Inertia	approx. 2,5 x 10^{-6} kg m^2
Startup Momentum at 20°C (68°F)	approx. 2 Ncm
Standard Connection	12 pin Contact-Bullet-Connector, radial
Further Types of Connections / Connector Types	Upon Request
Weight	approx. 0,3 kg

TR-Electronic GmbH
Eglishalde 6
78647 Trossingen
Tel. +49 7425 228-0
info@tr-electronic.de

Environmental conditions

Vibration, DIN EN 60068-2-6: 1996 ..... ≤ 100 m/s^2, sine 59-2000 Hz
Shock, DIN EN 60068-2-27: 1995..... ≤ 1000 m/s^2, half-sine 11 ms
EMC
- Immunity to disturbance, DIN EN 61000-6-2: 2006
- Transient emissions, DIN EN 61000-6-3: 2007

Operating Temperature..... -20 to +85°C
Storage Temperature..... -30 to +80°C
Relative humidity, DIN EN 60068-3-4: 2002 ..... 98 %, non condensing
Protection class, DIN EN 60529: 1991 *)..... IP 67

*) valid with screwed on mating connector and / or screwed together cable gland

Dimension drawing

(For project planning please request customized dimensional drawing!)

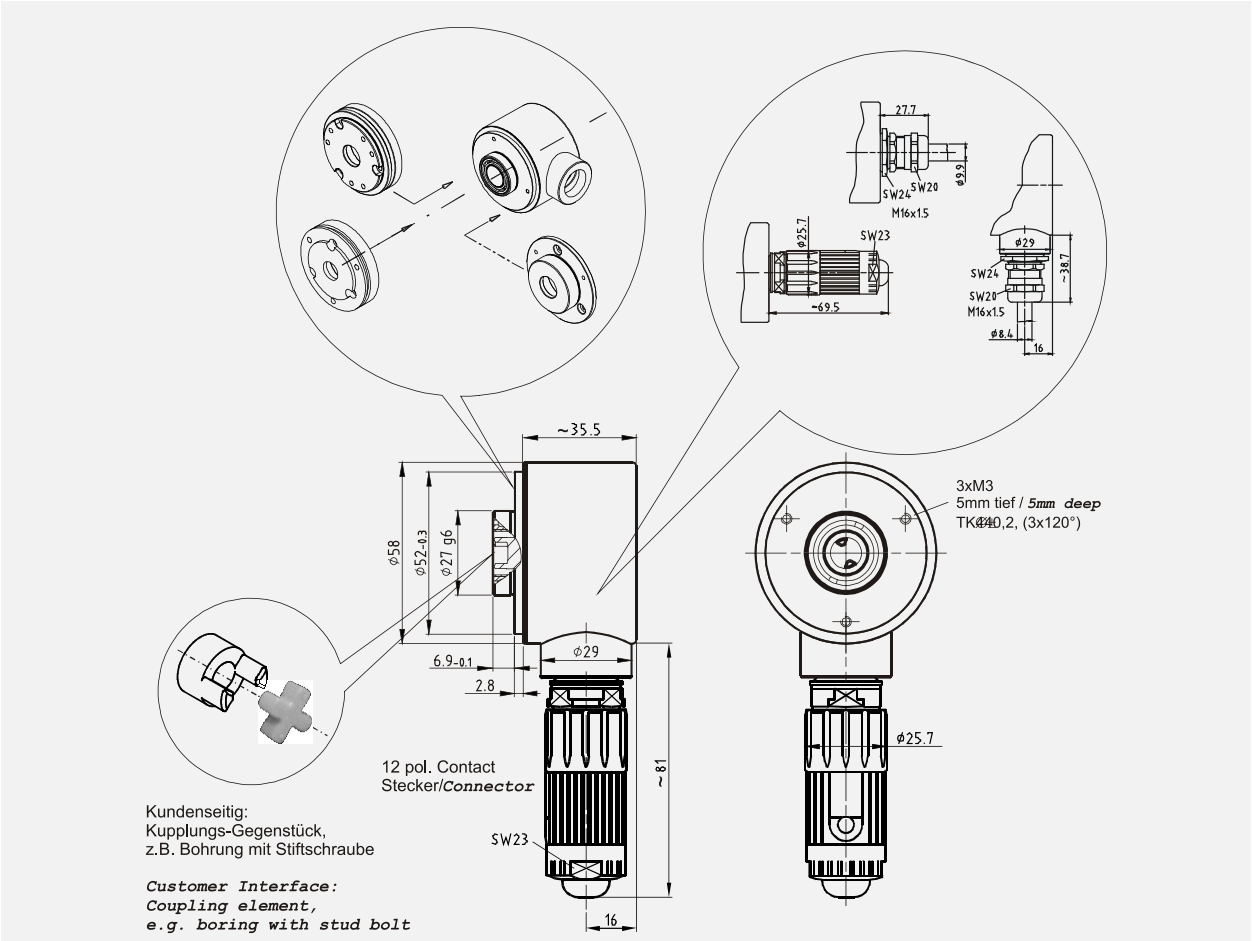

TR-Electronic GmbH
Eglishalde 6
78647 Trossingen
Tel. +49 7425 228-0
info@tr-electronic.de

Incremental-Encoder IH 76 (Type 0503)

TR-VCE-TI-GB-0630
04/12 Revision 03
010101-00769999-9999

+ Incremental interface
+ Type with hollow through shaft for direct coupling to any drive shaft (Ø 16 ... 28 mm)
+ Number of pulses per revolution up to 10 000

Characteristics

Supply Voltage	11 - 27 V DC
5 V DC	Upon Request
Output (11-27 V)	Push-Pull
- Maximum Current	max. 20 mA
- Incremental Signal	A, A neg., B, B neg.
- Marker Pulse	Z, Z neg., 1 pulse per revolution
- Maximum Output Frequency	160 kHz
Output (5 V)	Line Driver
- Maximum Current	max. 20 mA
- Incremental Signal	A, A neg., B; B neg.
- Marker Pulse	Z, Z neg., 1 pulse per revolution
- Maximum Output Frequency	300 kHz
Tolerance (at 20 kHz)	
- Phase Shift	± 10°
- Pulse Width	± 10°
Tolerance (at 100 kHz)	
- Phase Shift	± 30°
- Pulse Width	± 30°
Pulses per Revolution	1 to 10 000
Option	Sinusoidal Signal, 160 kHz (-3dB), voltage or current source 5 or 10 times the base PPR is possible. (i.e. 50000 or 100000 PPR)
Maximum Rotational Speed	6000 RPM
Maximum Angular Acceleration	≤ 105 rad/s2
Momentum of Inertia	60 x 10-6 kg m2
Startup Momentum 20°C (68° F)	approx. 0.08 Nm
Standard Connector	radial cable (pigtail), different cable lenghts on request
Weight	0.4 kg (0.9 lb.)

TR-Electronic GmbH
Eglishalde 6
78647 Trossingen
Tel. +49 7425 228-0
info@tr-electronic.de

Environmental conditions

Vibration, DIN EN 60068-2-6: 1996 ..... ≤ 100 m/s², sine 20-2000 Hz
Shock, DIN EN 60068-2-27: 1995..... ≤ 1000 m/s², half-sine 11 ms
EMC
- Immunity to disturbance, DIN EN 61000-6-2: 2006
- Transient emissions, DIN EN 61000-6-3: 2007

Operating Temperature..... 0° to 80°C (32° F to 176° F)
Extended Temperature (Optional) ..... -30° to +80°C (-22° to 176°F)
Relative humidity, DIN EN 60068-3-4: 2002 ..... 98 %, non condensing
Protection class, DIN EN 60529: 1991 *)..... IP 64

*) valid with screwed on mating connector and / or screwed together cable gland

Dimension drawing

(For project planning please request customized dimensional drawing!)

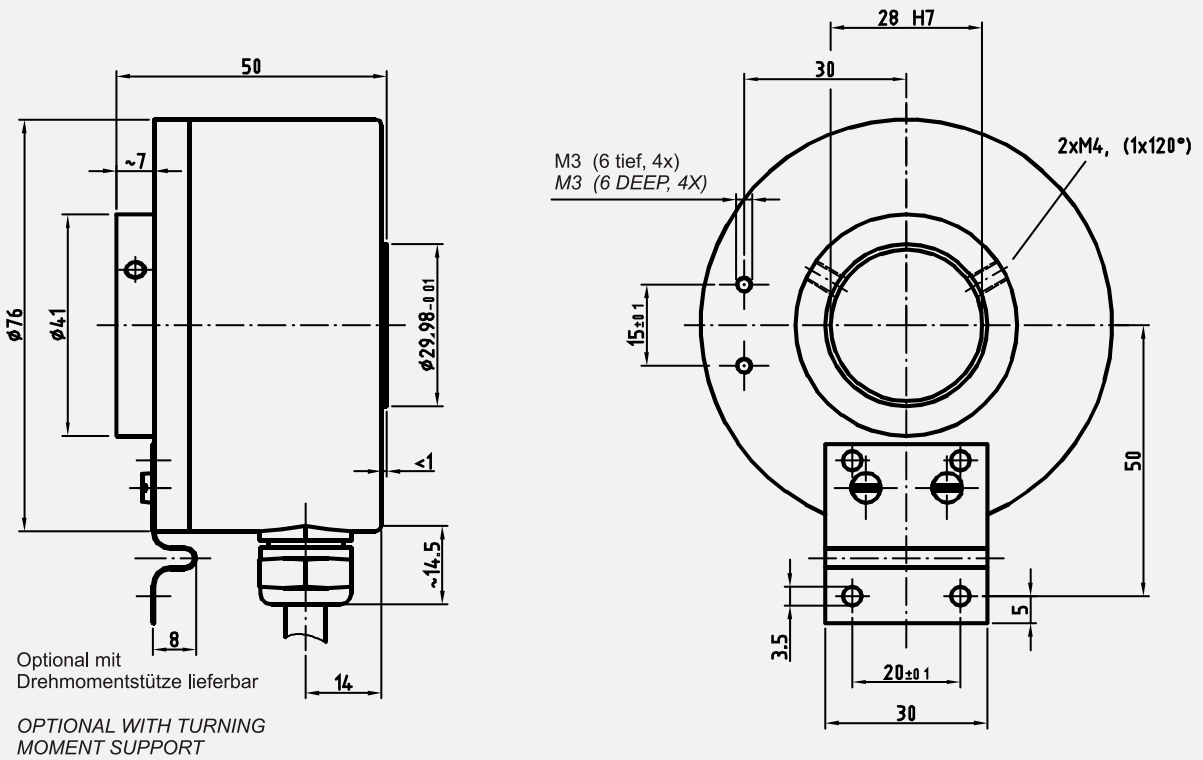

TR-Electronic GmbH
Eglishalde 6
78647 Trossingen
Tel. +49 7425 228-0
info@tr-electronic.de

Incremental-Encoder IH 76 (Type 0500)

TR-VCE-TI-GB-0620
04/12 Revision 02
010101-00769999-9999

+ Incremental interface
+ Type with blind shaft (Ø 6 ... 16 mm)
+ Number of pulses per revolution up to 10 000

Characteristics

Supply Voltage	11 - 27 V DC
5 V DC	Upon Request
Output (11-27 V)	Push-Pull
- Maximum Current	max. 20 mA
- Incremental Signal	A, A neg., B, B neg.
- Marker Pulse	Z, Z neg., 1 pulse per revolution
- Maximum Output Frequency	160 kHz
Output (5 V)	Line Driver
- Maximum Current	max. 20 mA
- Incremental Signal	A, A neg., B; B neg.
- Marker Pulse	Z, Z neg., 1 pulse per revolution
- Maximum Output Frequency	300 kHz
Tolerance (at 20 kHz)	
- Phase Shift	± 10°
- Pulse Width	± 10°
Tolerance (at 100 kHz)	
- Phase Shift	± 30°
- Pulse Width	± 30°
Pulses per Revolution	1 to 10 000
Option	Sinusoidal Signal, 160 kHz (-3dB), voltage or current source 5 or 10 times the base PPR is possible. (i.e. 50000 or 100000 PPR)
Maximum Rotational Speed	6000 RPM
Maximum Angular Acceleration	$\leq 10^5$ rad/s^2
Momentum of Inertia	60 x 10^{-6} kg m^2
Start up Momentum 20°C (68° F)	approx. 0.08 Nm
Standard Connector	PG 9 radial cable (pigtail), different cable lenghts on request
Weight	0.5 kg (1.1 lb.)

TR-Electronic GmbH
Eglishalde 6
78647 Trossingen
Tel. +49 7425 228-0
info@tr-electronic.de

Environmental conditions

Vibration, DIN EN 60068-2-6: 1996 ..... ≤ 100 m/s², sine 20-2000 Hz
Shock, DIN EN 60068-2-27: 1995..... ≤ 1000 m/s², half-sine 11 ms
EMC
- Immunity to disturbance, DIN EN 61000-6-2: 2006
- Transient emissions, DIN EN 61000-6-3: 2007

Operating Temperature..... 0° to 80°C (32° F to 176° F)
Extended Temperature (Optional) ..... -30° to +80°C (-22° to 176°F)
Relative humidity, DIN EN 60068-3-4: 2002 ..... 98 %, non condensing
Protection class, DIN EN 60529: 1991 *)..... IP 64

*) valid with screwed on mating connector and / or screwed together cable gland

Dimension drawing

(For project planning please request customized dimensional drawing!)

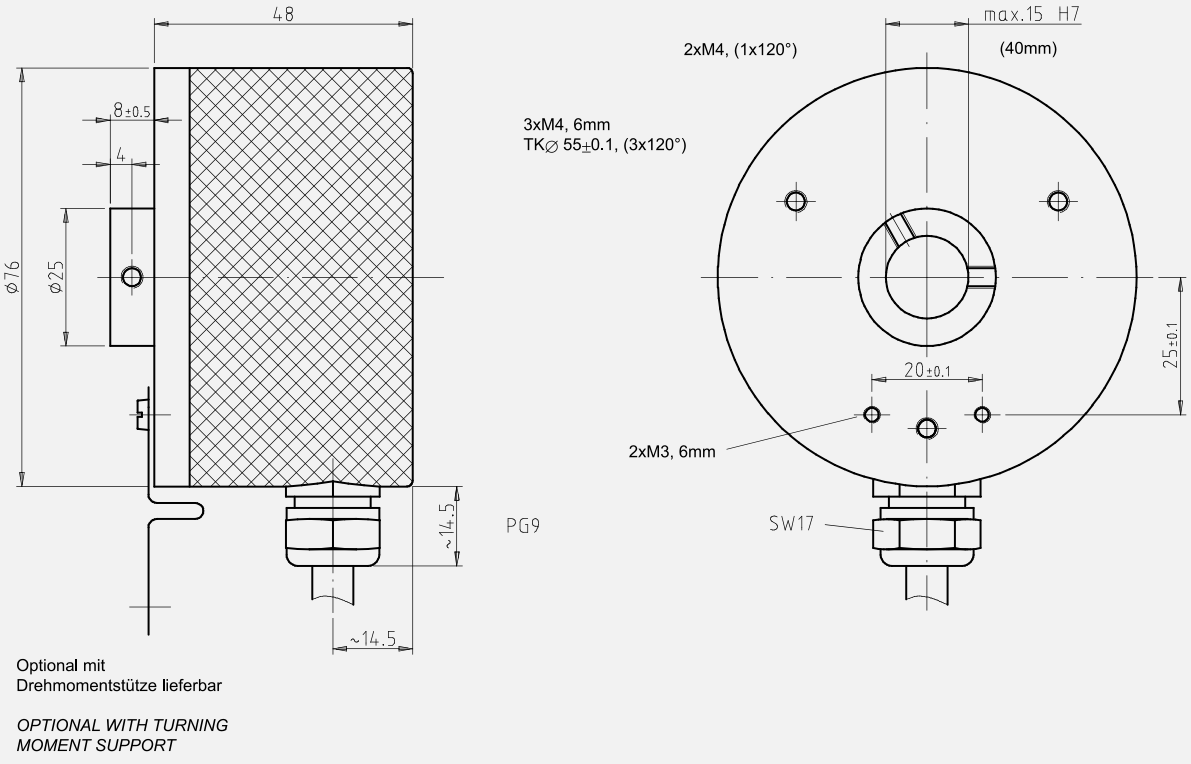

TR-Electronic GmbH
Eglishalde 6
78647 Trossingen
Tel. +49 7425 228-0
info@tr-electronic.de

Incremental-Encoder IH 120

TR-VCE-TI-GB-0650
04/12 Revision 03
010101-01209999-9999

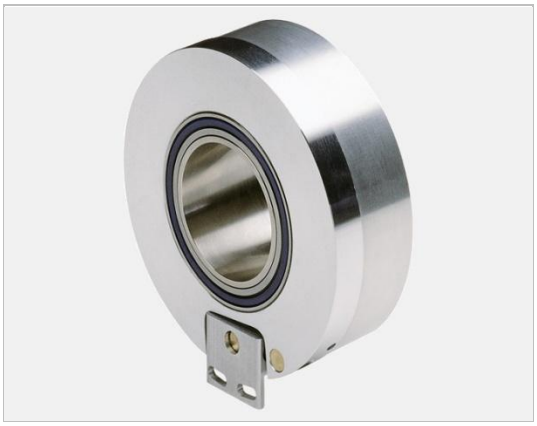

+ Incremental interface
+ Type with hollow through shaft for direct coupling to any drive shaft (Ø 27 ... 55 mm)
+ Number of pulses per revolution up to 10 000

Characteristics

Supply Voltage	11 - 27 V DC
5 V DC	Upon Request
Output (11-27 V)	Push-Pull
- Maximum Current	max. 20 mA
- Incremental Signal	A, A neg., B, B neg.
- Marker Pulse	Z, Z neg., 1 pulse per revolution
- Maximum Output Frequency	160 kHz
Output (5 V)	Line Driver
- Maximum Current	max. 20 mA
- Incremental Signal	A, A neg., B, B neg.
- Marker Pulse	Z, Z neg., 1 pulse per revolution
- Maximum Output Frequency	300 kHz
Tolerance (at 20 kHz)	
- Phase Shift	± 10°
- Pulse Width	± 10°
Tolerance (at 100 kHz)	
- Phase Shift	± 30°
- Pulse Width	± 30°
Pulses per Revolution (standard)	1024, 2500, 3600 and 10 000, other pulse numbers upon request
Option	Sinusoidal Signal, 160 kHz (-3dB), voltage or current source
Maximum Rotational Speed	4000 RPM
Maximum Angular Acceleration	$\leq 10^4$ rad/s^2
Momentum of Inertia	400 x 10^{-6} kg m^2
Startup Momentum 20°C (68° F)	approx. 0,10 Nm
Standard Connector	radial cable (pigtail), different cable lenghts on request
Weight	1.2 kg (2.6 lb.)

TR-Electronic GmbH
Eglishalde 6
78647 Trossingen
Tel. +49 7425 228-0
info@tr-electronic.de

Environmental conditions

Vibration, DIN EN 60068-2-6: 1996 ..... ≤ 100 m/s², sine 20-2000 Hz
Shock, DIN EN 60068-2-27: 1995..... ≤ 1000 m/s², half-sine 11 ms
EMC
- Immunity to disturbance, DIN EN 61000-6-2: 2006
- Transient emissions, DIN EN 61000-6-3: 2007

Operating Temperature..... 0° to 80°C (32° F to 176° F)
Extended Temperature (Optional) ..... -30° to +80°C (-22° to 176°F)
Relative humidity, DIN EN 60068-3-4: 2002 ..... 98 %, non condensing
Protection class, DIN EN 60529: 1991 *)..... IP 64

*) valid with screwed on mating connector and / or screwed together cable gland

Dimension drawing

(For project planning please request customized dimensional drawing!)

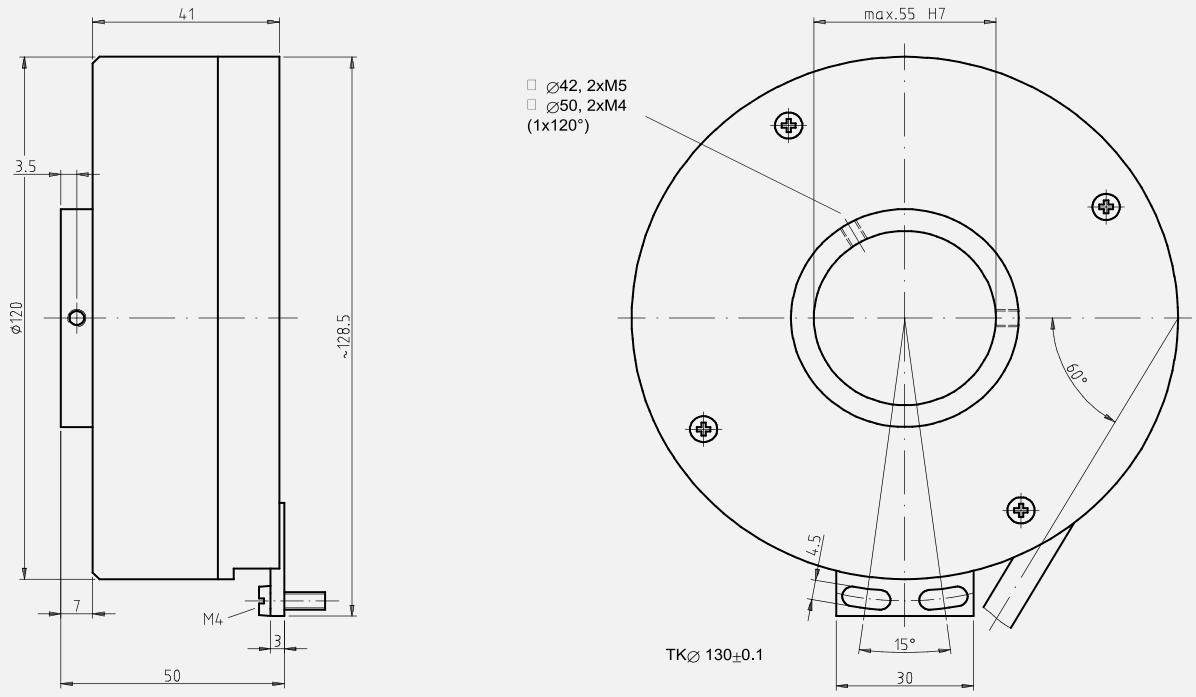

TR-Electronic GmbH
Eglishalde 6
78647 Trossingen
Tel. +49 7425 228-0
info@tr-electronic.de

Incremental-Encoder IH 76 (Type 0503 V)

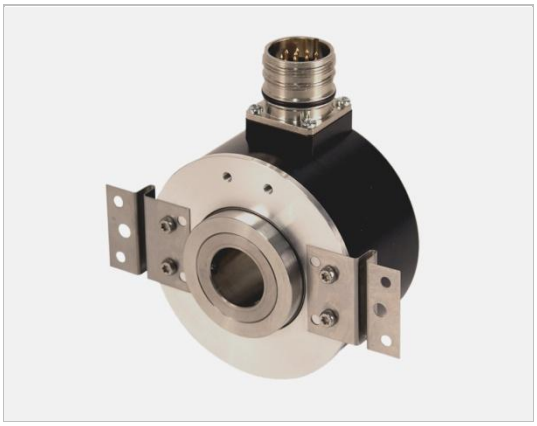

+ Incremental interface
+ Type with hollow through shaft Ø 16…28 mm
+ Number of pulses per revolution:
  - Version with 9.000 ppr
  - Version with 10.000 ppr
  - Version with 18.000 ppr
+ High accuracy, thus it is applicable as a measuring encoder

Characteristics

Supply voltage	11…27 VDC
5 VDC, ±5 %	on request
Current consumption without load	≤ 100 mA
Accuracy	
- Version with 9.000 ppr	± 7"
- Version with 10.000 ppr	± 6"
- Version with 18.000 ppr	± 5"
Interpolation, optional	internal 5/10/25/50 times interpolation
Signal outputs	Square wave
Outputs (11-27 V level)	Push-Pull, short-circuit-proof
- Output current	≤ 20 mA
- Incremental signal, optional with inverting	K1, K2 phase-shifted 90° electrically
- Zero-pulse, optional with inverting	K0, 1x per revolution, length 90°, 180°, 360° electrically
- Output frequency	≤ 300 kHz
Outputs (5 V level)	Line driver
- Output current	≤ 20 mA
- Incremental signals, optional with inverting	K1, K2 phase-shifted 90° electrically
- Zero-pulse, optional with inverting	K0, 1x per revolution, length 90°, 180°, 360° electrically
- Output frequency	≤ 1 MHz
Mechanically permissible speed	≤ 4.000 min^{-1}
Shaft load	Own mass
Connection	
- Version with cable outlet	radial, cable length on request
- Version with connector	radial
Mass	approx. 0.5 kg

TR-Electronic GmbH
Eglishalde 6
78647 Trossingen
Tel. +49 7425 228-0
info@tr-electronic.de

Environmental conditions

Vibration, DIN EN 60068-2-6: 1996 ..... ≤ 100 m/s², sine 20-2000 Hz
Shock, DIN EN 60068-2-27: 1995..... ≤ 1000 m/s², half-sine 11ms
EMC
- Immunity to disturbance, DIN EN 61000-6-2: 2006
- Transient emissions, DIN EN 61000-6-3: 2007

Working temperature ..... 0 °C…+ 80 °C
Storage temperature ..... - 30 °C…+ 80 °C, dry
Relative humidity, DIN EN 60068-3-4: 2002 ..... 98 %, non condensing
Protection class, DIN EN 60529: 1991 *) ..... max. IP 64, dependent on the connector or the connection technique

*) valid with screwed on mating connector and / or screwed together cable gland

Dimension drawing

(For project planning please request customized dimensional drawing!)

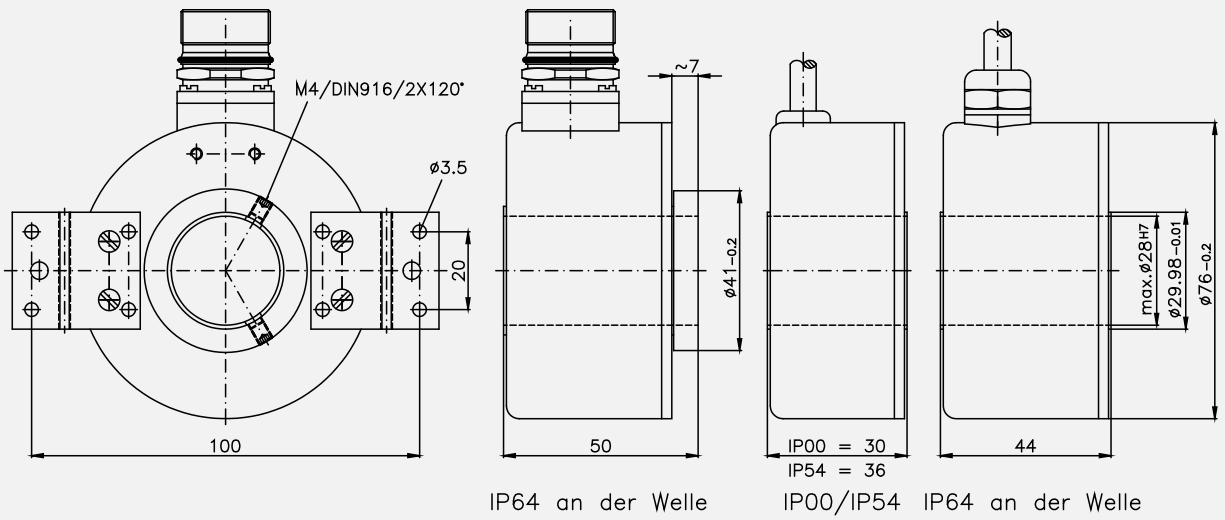

TR-Electronic GmbH
Eglishalde 6
78647 Trossingen
Tel. +49 7425 228-0
info@tr-electronic.de

Incremental-Encoder IE 92 V

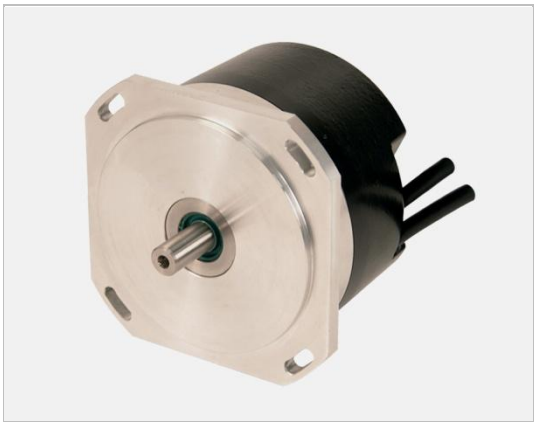

+ Incremental interface
+ Type with solid shaft Ø 10 mm
+ Number of pulses per revolution:
  - Version with 9.000 ppr
  - Version with 10.000 ppr
  - Version with 18.000 ppr
+ High accuracy, thus it is applicable as a measuring encoder

Characteristics

Supply voltage	11…27 VDC
5 VDC, ±5 %	on request
Current consumption without load	≤ 100 mA
Accuracy	
- Version with 9.000 ppr	± 7"
- Version with 10.000 ppr	± 6"
- Version with 18.000 ppr	± 5"
Interpolation, optional	internal 5/10/25/50 times interpolation
Signal outputs	Square wave
Outputs (11-27 V level)	Push-Pull, short-circuit-proof
- Output current	≤ 20 mA
- Incremental signal, optional with inverting	K1, K2 phase-shifted 90° electrically
- Zero-pulse, optional with inverting	K0, 1x per revolution, length 90°, 180°, 360° electrically
- Output frequency	≤ 300 kHz
Outputs (5 V level)	Line driver
- Output current	≤ 20 mA
- Incremental signals, optional with inverting	K1, K2 phase-shifted 90° electrically
- Zero-pulse, optional with inverting	K0, 1x per revolution, length 90°, 180°, 360° electrically
- Output frequency	≤ 1 MHz
Mechanically permissible speed	≤ 4.000 min^{-1}
Shaft load, at shaft end	axial 10 N, radial 20 N
Connection	Cable outlet radial, cable length on request
Mass	approx. 0.8 kg

TR-Electronic GmbH
Eglishalde 6
78647 Trossingen
Tel. +49 7425 228-0
info@tr-electronic.de

Environmental conditions

Vibration, DIN EN 60068-2-6: 1996 ..... ≤ 100 m/s², sine 20-2000 Hz
Shock, DIN EN 60068-2-27: 1995..... ≤ 1000 m/s², half-sine 11ms
EMC
- Immunity to disturbance, DIN EN 61000-6-2: 2006
- Transient emissions, DIN EN 61000-6-3: 2007

Working temperature ..... 0 °C…+80 °C
Storage temperature ..... -30 °C…+80 °C, dry
Relative humidity, DIN EN 60068-3-4: 2002 ..... 98 %, non condensing
Protection class, DIN EN 60529: 1991 *) ..... IP 64

*) valid with screwed on mating connector and / or screwed together cable gland

Dimension drawing

(For project planning please request customized dimensional drawing!)

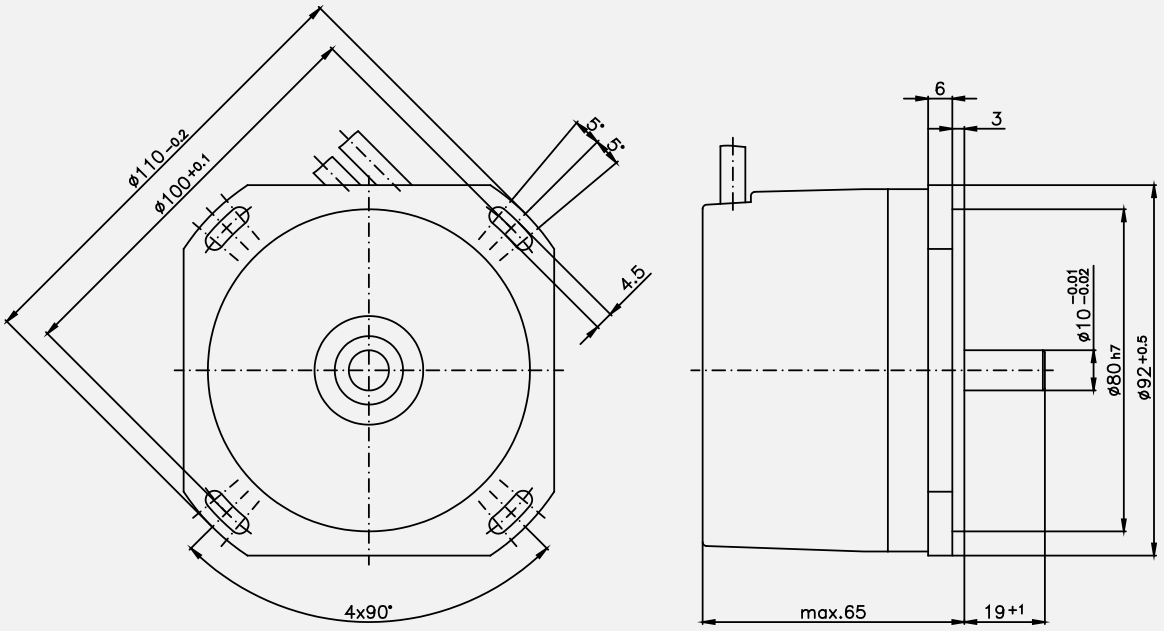

TR-Electronic GmbH
Eglishalde 6
78647 Trossingen
Tel. +49 7425 228-0
info@tr-electronic.de

Incremental-Encoder IH 92 V

+ Incremental interface
+ Type with hollow through shaft Ø 20 or 22 mm
+ Number of pulses per revolution:
  - Version with 9.000 ppr
  - Version with 10.000 ppr
  - Version with 18.000 ppr
+ High accuracy, thus it is applicable as a measuring encoder

Characteristics

Supply voltage	11…27 VDC
5 VDC, ±5 %	on request
Current consumption without load	≤ 100 mA
Accuracy	
- Version with 9.000 ppr	± 7"
- Version with 10.000 ppr	± 6"
- Version with 18.000 ppr	± 5"
Interpolation, optional	internal 5/10/25/50 times interpolation
Signal outputs	Square wave
Outputs (11-27 V level)	Push-Pull, short-circuit-proof
- Output current	≤ 20 mA
- Incremental signal, optional with inverting	K1, K2 phase-shifted 90° electrically
- Zero-pulse, optional with inverting	K0, 1x per revolution, length 90°, 180°, 360° electrically
- Output frequency	≤ 300 kHz
Outputs (5 V level)	Line driver
- Output current	≤ 20 mA
- Incremental signals, optional with inverting	K1, K2 phase-shifted 90° electrically
- Zero-pulse, optional with inverting	K0, 1x per revolution, length 90°, 180°, 360° electrically
- Output frequency	≤ 1 MHz
Mechanically permissible speed	≤ 4.000 min^{-1}
Shaft load	Own mass
Connection	Cable outlet radial, cable length on request
Mass	approx. 1.2 kg

TR-Electronic GmbH
Eglishalde 6
78647 Trossingen
Tel. +49 7425 228-0
info@tr-electronic.de

Environmental conditions

Vibration, DIN EN 60068-2-6: 1996 ..... ≤ 100 m/s², sine 20-2000 Hz
Shock, DIN EN 60068-2-27: 1995..... ≤ 1000 m/s², half-sine 11ms
EMC
- Immunity to disturbance, DIN EN 61000-6-2: 2006
- Transient emissions, DIN EN 61000-6-3: 2007

Working temperature ..... 0 °C…+80 °C
Storage temperature ..... -30 °C…+80 °C, dry
Relative humidity, DIN EN 60068-3-4: 2002 ..... 98 %, non condensing
Protection class, DIN EN 60529: 1991 *) ..... IP 64

*) valid with screwed on mating connector and / or screwed together cable gland

Dimension drawing

(For project planning please request customized dimensional drawing!)

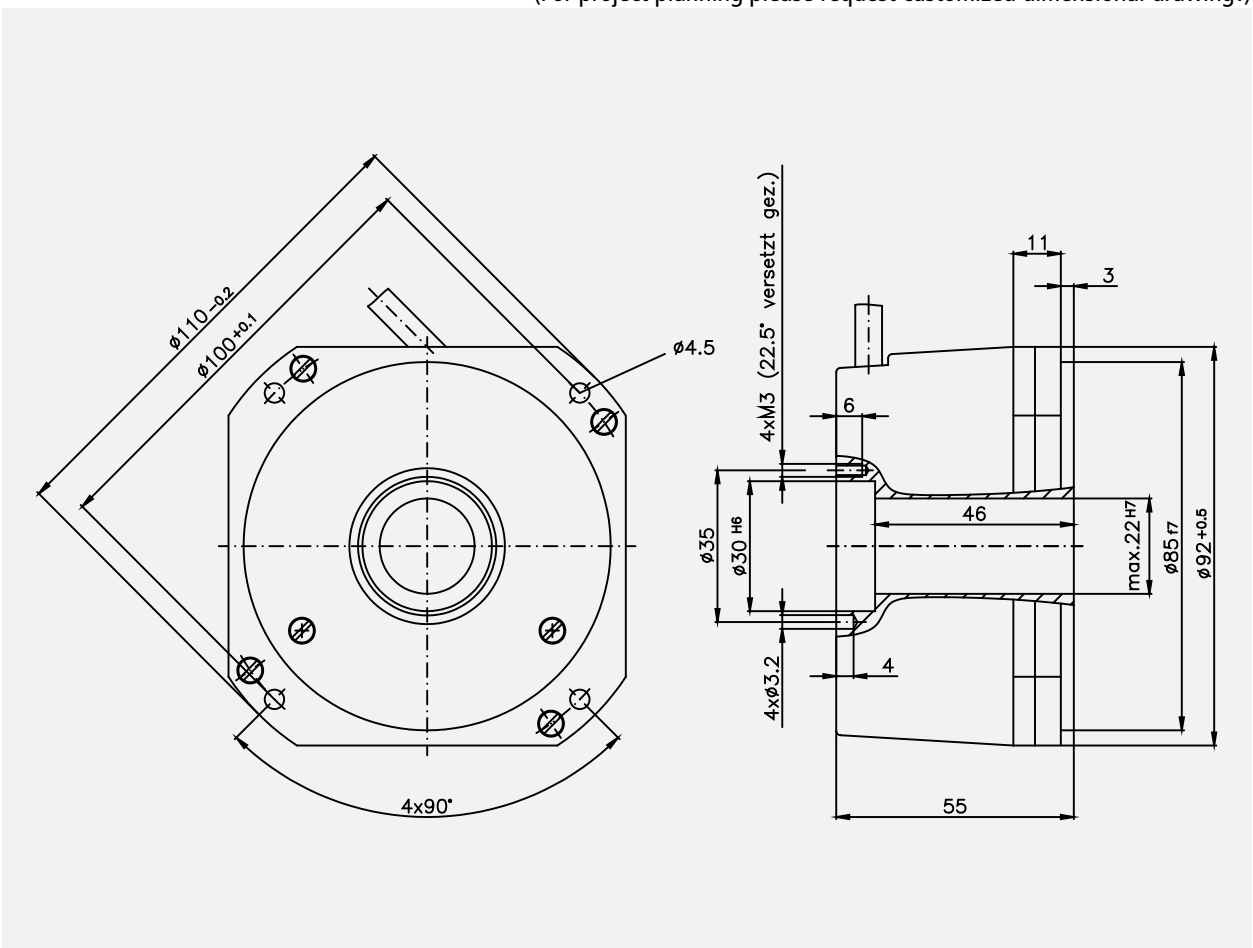

TR-Electronic GmbH
Eglishalde 6
78647 Trossingen
Tel. +49 7425 228-0
info@tr-electronic.de

Incremental-Encoder IH 120 V

+ Incremental interface
+ Type with hollow through shaft ∅ 27…55 mm
+ Number of pulses per revolution:
  - Version with 9.000 ppr
  - Version with 10.000 ppr
  - Version with 18.000 ppr
+ High accuracy, thus it is applicable as a measuring encoder

Characteristics

Supply voltage	11…27 VDC
5 VDC, ±5 %	on request
Current consumption without load	≤ 100 mA
Accuracy	
- Version with 9.000 ppr	± 7"
- Version with 10.000 ppr	± 6"
- Version with 18.000 ppr	± 5"
Interpolation, optional	internal 5/10/25/50 times interpolation
Signal outputs	Square wave
Outputs (11-27 V level)	Push-Pull, short-circuit-proof
- Output current	≤ 20 mA
- Incremental signal, optional with inverting	K1, K2 phase-shifted 90° electrically
- Zero-pulse, optional with inverting	K0, 1x per revolution, length 90°, 180°, 360° electrically
- Output frequency	≤ 300 kHz
Outputs (5 V level)	Line driver
- Output current	≤ 20 mA
- Incremental signals, optional with inverting	K1, K2 phase-shifted 90° electrically
- Zero-pulse, optional with inverting	K0, 1x per revolution, length 90°, 180°, 360° electrically
- Output frequency	≤ 1 MHz
Mechanically permissible speed	≤ 4.000 min^{-1}
Shaft load	Own mass
Connection	
- Version with cable outlet	radial, cable length on request
- Version with connector	radial
Mass	approx. 1 kg

TR-Electronic GmbH
Eglishalde 6
78647 Trossingen
Tel. +49 7425 228-0
info@tr-electronic.de

Environmental conditions

Vibration, DIN EN 60068-2-6: 1996 ..... ≤ 100 m/s², sine 20-2000 Hz
Shock, DIN EN 60068-2-27: 1995..... ≤ 1000 m/s², half-sine 11 ms
EMC
- Immunity to disturbance, DIN EN 61000-6-2: 2006
- Transient emissions, DIN EN 61000-6-3: 2007

Working temperature ..... 0 °C…+80 °C
Storage temperature ..... -30 °C…+80 °C, dry
Relative humidity, DIN EN 60068-3-4: 2002 ..... 98 %, non condensing
Protection class, DIN EN 60529: 1991 *) ..... IP 64

*) valid with screwed on mating connector and / or screwed together cable gland

Dimension drawing

(For project planning please request customized dimensional drawing!)

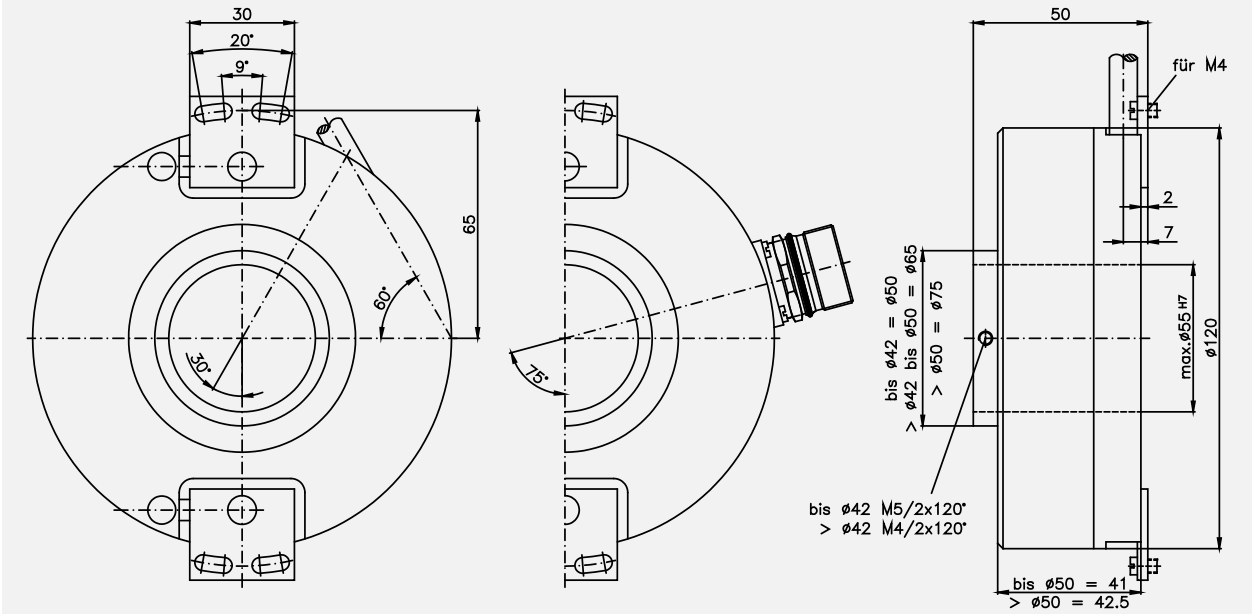

TR-Electronic GmbH
Eglishalde 6
78647 Trossingen
Tel. +49 7425 228-0
info@tr-electronic.de

Incremental-Encoder IEV 58

+ Incremental interface
+ Type with solid shaft
+ Modular product line
+ Extensive parameter setting possibilities
+ Special parameters upon request
+ Short lead times
+ Further interfaces available
+ Modular construction for mechanical customizations

Characteristics

Supply voltage ..... 11…28 VDC, optional 5 VDC ±5%
Current consumption without load ..... < 65 mA, < 80 mA at 5 VDC

Number of pulses/revolution [1] ..... ≥2…≤ 1.024, >1.024: 2.048, 4.096, 8.192

Version with push-pull
- Output level ..... 11…28 VDC, supply voltage
- Output current ..... ≤ 30 mA
- Output frequency ..... 150 kHz, ±15°
- Supply voltage ..... 11…28 V DC

Version with line driver
- Output level ..... 5 VDC, RS422
- Output current ..... ≤ 50 mA
- Output frequency ..... 300 kHz, ±15°
- Supply voltage ..... 11…28 V DC, optional 5 VDC

Incremental signals ..... A+, A–, B+, B–
Zero pulse ..... Ref+, Ref–
Programmable parameters
- Number of pulses
- Phase position: A / B, Zero pulse(s)
- Zero pulse: Pulse length, Number of pulses
- Enable/Disable Preset function, Set Ref+, Ref–

Preset ..... electronic adjustment of the reference signals Ref+, Ref–
Logic level ..... "0" < + 2 VDC, "1" = Supply voltage

Mechanically permissible speed ..... ≤ 12.000 min^{-1}
Shaft load, at the shaft end ..... ≤ 10 N axial, ≤ 20 N radial
Bearing life time ..... ≥ 3.9 * 10^{10} revolutions at
- Speed ..... ≤ 6.000 min^{-1}
- Operating temperature ..... ≤ 60 °C
- Shaft load, at the shaft end ..... ≤ 5 N axial, ≤ 10 N radial

Permissible angular acceleration ..... ≤ 10^4 rad/s^2
Moment of inertia ..... typically 2.5 * 10^{-6} kg m^2
Start-up torque at 20°C ..... typically 2 Ncm
Mass ..... 0.3 kg…0.5 kg

[1] programmable parameter

TR-Electronic GmbH
Eglishalde 6
78647 Trossingen
Tel. +49 7425 228-0
info@tr-electronic.de

Environmental conditions

Vibration, DIN EN 60068-2-6: 1996 ..... ≤ 100 m/s², sine 50-2000 Hz
Shock, DIN EN 60068-2-27: 1995..... ≤ 1000 m/s², half-sine 11ms
EMC
- Immunity to disturbance, DIN EN 61000-6-2: 2006
- Transient emissions, DIN EN 61000-6-3: 2007

Working temperature ..... 0 °C…+60 °C, optional -20 °C…+70 °C
Storage temperature ..... -30 °C…+80 °C, dry
Relative humidity, DIN EN 60068-3-4: 2002 ..... 98 %, non condensing
Protection class, DIN EN 60529: 1991 [2] ..... IP 65

[2] valid with screwed on mating connector and / or screwed together cable gland

Dimension drawing

(For project planning please request customized dimensional drawing!)

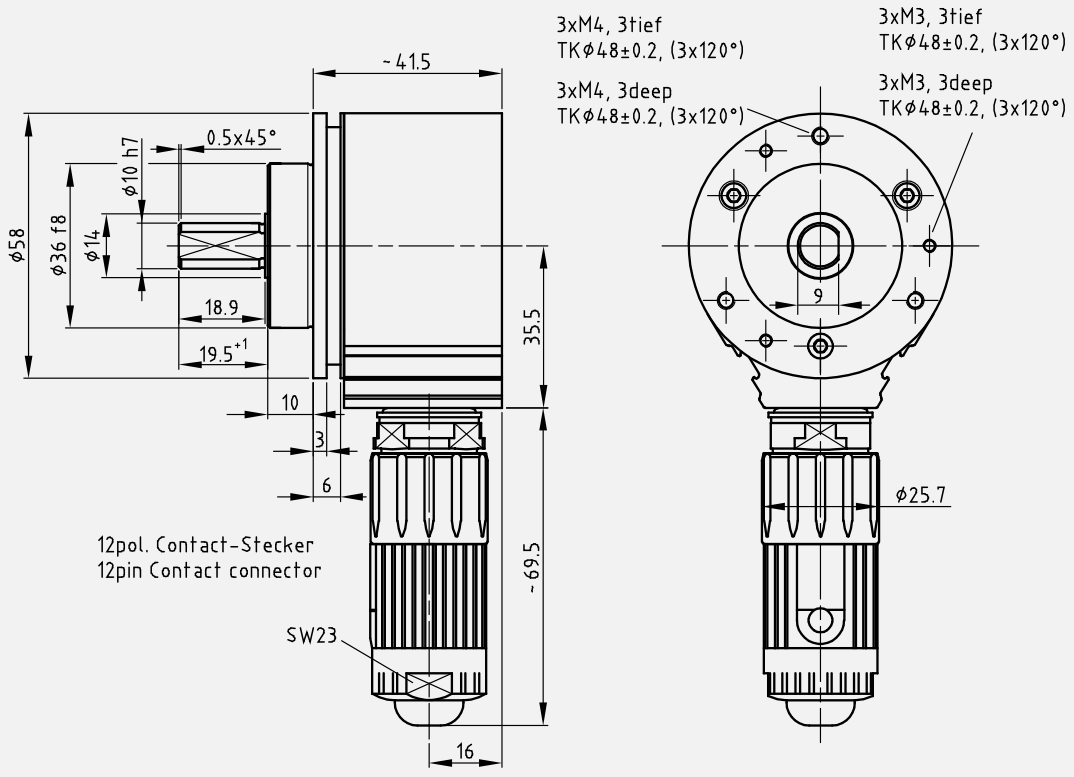

TR-Electronic GmbH
Eglishalde 6
78647 Trossingen
Tel. +49 7425 228-0
info@tr-electronic.de

Incremental-Encoder IEH 58

+ Incremental interface
+ Type with hollow through shaft
+ Modular product line
+ Extensive parameter setting possibilities
+ Special parameters upon request
+ Short lead times
+ Further interfaces available
+ Modular construction for mechanical customizations

Characteristics

Supply voltage ..... 11…28 VDC, optional 5 VDC ±5%
Current consumption without load ..... < 65 mA, < 80 mA at 5 VDC

Number of pulses/revolution [1] ..... ≥2…≤ 1.024, >1.024: 2.048, 4.096, 8.192

Version with push-pull
- Output level ..... 11…28 VDC, supply voltage
- Output current ..... ≤ 30 mA
- Output frequency ..... 150 kHz, ±15°
- Supply voltage ..... 11…28 V DC

Version with line driver
- Output level ..... 5 VDC, RS422
- Output current ..... ≤ 50 mA
- Output frequency ..... 300 kHz, ±15°
- Supply voltage ..... 11…28 V DC, optional 5 VDC

Incremental signals ..... A+, A–, B+, B–
Zero pulse ..... Ref+, Ref–
Programmable parameters
- Number of pulses
- Phase position: A / B, Zero pulse(s)
- Zero pulse: Pulse length, Number of pulses
- Enable/Disable Preset function, Set Ref+, Ref–

Preset ..... electronic adjustment of the reference signals Ref+, Ref–
Logic level ..... "0" < + 2 VDC, "1" = Supply voltage

Mechanically permissible speed ..... ≤ 6.000 min^{-1}
Shaft load ..... Own mass
Bearing life time ..... ≥ 3.9 * 10^{10} revolutions at
- Speed ..... ≤ 6.000 min^{-1}
- Operating temperature ..... ≤ 60 °C

Shaft diameter in mm 8H7, 10H7, 12H7
Permissible angular acceleration ..... ≤ 10^4 rad/s^2
Moment of inertia ..... typically 2.5 * 10^{-6} kg m^2
Start-up torque at 20°C ..... typically 3.7 Ncm
Mass ..... 0.3 kg…0.5 kg

[1] programmable parameter

TR-Electronic GmbH
Eglishalde 6
78647 Trossingen
Tel. +49 7425 228-0
info@tr-electronic.de

Environmental conditions

Vibration, DIN EN 60068-2-6: 1996 ..... ≤ 100 m/s², sine 50-2000 Hz
Shock, DIN EN 60068-2-27: 1995..... ≤ 1000 m/s², half-sine 11ms
EMC
- Immunity to disturbance, DIN EN 61000-6-2: 2006
- Transient emissions, DIN EN 61000-6-3: 2007

Working temperature ..... 0 °C…+60 °C, optional -20 °C…+70 °C
Storage temperature ..... -30 °C…+80 °C, dry
Relative humidity, DIN EN 60068-3-4: 2002 ..... 98 %, non condensing
Protection class, DIN EN 60529: 1991 [2] ..... IP 54

[2] valid with screwed on mating connector and / or screwed together cable gland

Dimension drawing

(For project planning please request customized dimensional drawing!)

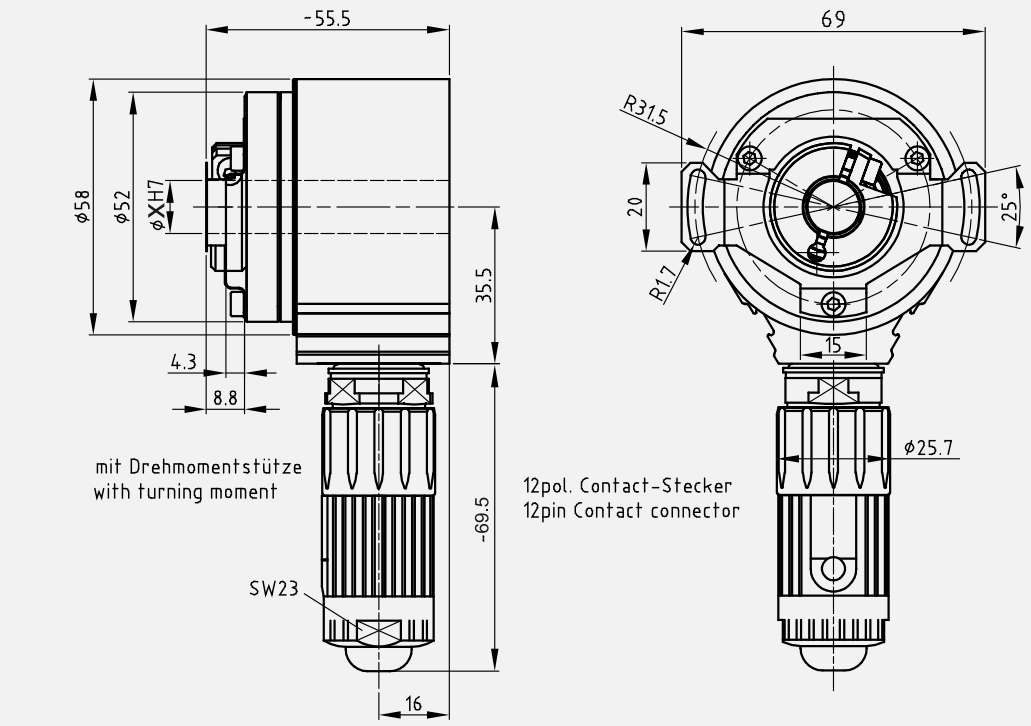

X = ∅ 8H7, ∅ 10H7, ∅ 12H7

TR-Electronic GmbH
Eglishalde 6
78647 Trossingen
Tel. +49 7425 228-0
info@tr-electronic.de

Incremental-Encoder IES 58

+ Incremental interface
+ Type with blind shaft
+ Modular product line
+ Extensive parameter setting possibilities
+ Special parameters upon request
+ Short lead times
+ Further interfaces available
+ Modular construction for mechanical customizations

Characteristics

Supply voltage ..... 11…28 VDC, optional 5 VDC ±5%
Current consumption without load ..... < 65 mA, < 80 mA at 5 VDC

Number of pulses/revolution [1] ..... ≥2…≤ 1.024, >1.024: 2.048, 4.096, 8.192

Version with push-pull
- Output level ..... 11…28 VDC, supply voltage
- Output current ..... ≤ 30 mA
- Output frequency ..... 150 kHz, ±15°
- Supply voltage ..... 11…28 V DC

Version with line driver
- Output level ..... 5 VDC, RS422
- Output current ..... ≤ 50 mA
- Output frequency ..... 300 kHz, ±15°
- Supply voltage ..... 11…28 V DC, optional 5 VDC

Incremental signals ..... A+, A–, B+, B–
Zero pulse ..... Ref+, Ref–
Programmable parameters
- Number of pulses
- Phase position: A / B, Zero pulse(s)
- Zero pulse: Pulse length, Number of pulses
- Enable/Disable Preset function, Set Ref+, Ref–

Preset ..... electronic adjustment of the reference signals Ref+, Ref–
Logic level ..... "0" < + 2 VDC, "1" = Supply voltage

Mechanically permissible speed ..... ≤ 12.000 min^{-1}
Shaft load ..... Own mass
Bearing life time ..... ≥ 3.9 * 10^{10} revolutions at
- Speed ..... ≤ 6.000 min^{-1}
- Operating temperature ..... ≤ 60 °C

Shaft diameter in mm 8H7, 10H7, 12H7
Permissible angular acceleration ..... ≤ 10^4 rad/s^2
Moment of inertia ..... typically 2.5 * 10^{-6} kg m^2
Start-up torque at 20°C ..... typically 2 Ncm
Mass ..... 0.3 kg…0.5 kg

[1] programmable parameter

TR-Electronic GmbH
Eglishalde 6
78647 Trossingen
Tel. +49 7425 228-0
info@tr-electronic.de

Environmental conditions

Vibration, DIN EN 60068-2-6: 1996 ..... ≤ 100 m/s², sine 50-2000 Hz
Shock, DIN EN 60068-2-27: 1995..... ≤ 1000 m/s², half-sine 11ms
EMC
- Immunity to disturbance, DIN EN 61000-6-2: 2006
- Transient emissions, DIN EN 61000-6-3: 2007

Working temperature ..... 0 °C…+60 °C, optional -20 °C…+70 °C
Storage temperature ..... -30 °C…+80 °C, dry
Relative humidity, DIN EN 60068-3-4: 2002 ..... 98 %, non condensing
Protection class, DIN EN 60529: 1991 [2] ..... IP 65

[2] valid with screwed on mating connector and / or screwed together cable gland

Dimension drawing

(For project planning please request customized dimensional drawing!)

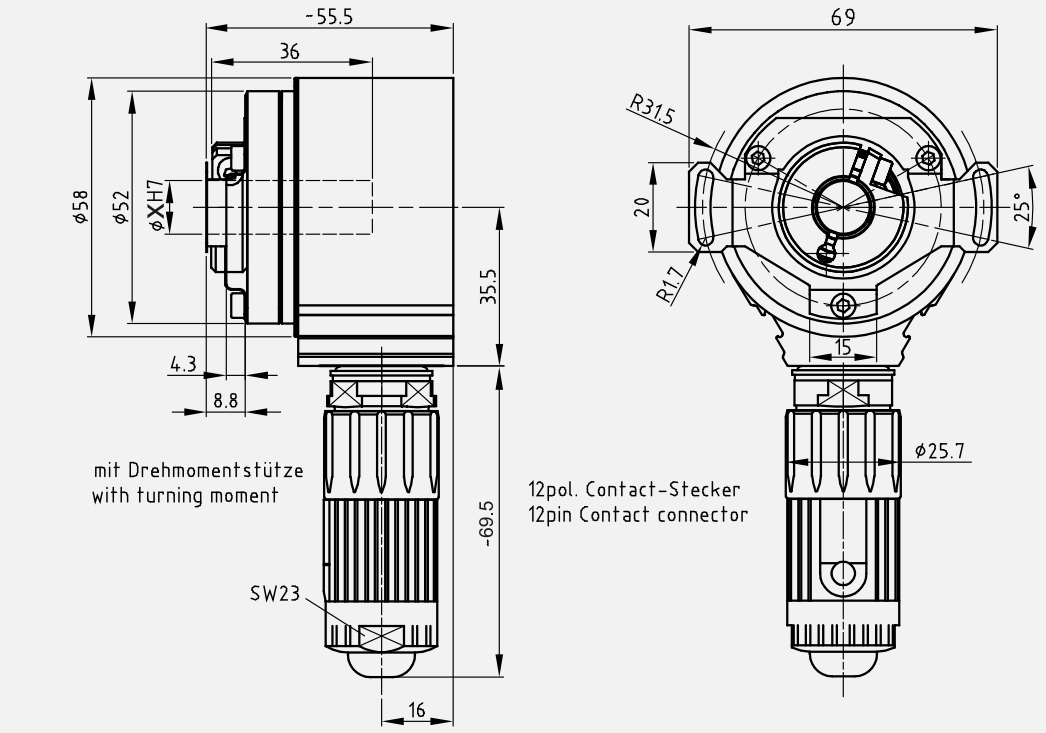

X = ∅ 8H7, ∅ 10H7, ∅ 12H7

TR-Electronic GmbH
Eglishalde 6
78647 Trossingen
Tel. +49 7425 228-0
info@tr-electronic.de

Incremental-Encoder IPV 58

+ Incremental interface
+ Type with solid shaft
+ Pole ring scanning unit
+ Modular product line
+ Extensive parameter setting possibilities
+ Special parameters upon request
+ Number of pulses up to 16.384
+ Modular construction for mechanical customizations

Characteristics

Supply voltage ..... 7.2…30 VDC
Current consumption without load ..... < 65 mA

Number of pulses/revolution [1] ..... ≤ 16.384

Incremental signals ..... A+, A–, B+, B–
Zero pulse ..... Ref+, Ref–
Output frequency ..... 50 kHz
Programmable parameters
- Number of pulses
- Phase position: A / B, Zero pulse(s)
- Zero pulse: Pulse length, Number of pulses
- Enable/Disable Preset function, Set Ref+, Ref–

Preset ..... electronic adjustment of the reference signals Ref+, Ref–
Logic level ..... "0" < + 2 VDC, "1" = Supply voltage

Mechanically permissible speed ..... ≤ 12.000 min^{-1}
Shaft load, at the shaft end ..... ≤ 10 N axial, ≤ 20 N radial
Bearing life time ..... ≥ 3.9 * 10^{10} revolutions at
- Speed ..... ≤ 6.000 min^{-1}
- Operating temperature ..... ≤ 60 °C
- Shaft load, at the shaft end ..... ≤ 5 N axial, ≤ 10 N radial

Permissible angular acceleration ..... ≤ 10^4 rad/s^2
Moment of inertia ..... typically 2.5 * 10^{-6} kg m^2
Start-up torque at 20°C ..... typically 2 Ncm
Mass ..... 0.3 kg…0.5 kg

[1] programmable parameter

TR-Electronic GmbH
Eglishalde 6
78647 Trossingen
Tel. +49 7425 228-0
info@tr-electronic.de

Environmental conditions

Vibration, DIN EN 60068-2-6: 1996 ..... ≤ 100 m/s², sine 50-2000 Hz
Shock, DIN EN 60068-2-27: 1995..... ≤ 1000 m/s², half-sine 11ms
EMC
- Immunity to disturbance, DIN EN 61000-6-2: 2006
- Transient emissions, DIN EN 61000-6-3: 2007

Working temperature ..... 0 °C…+85 °C
Storage temperature ..... -30 °C…+80 °C, dry
Relative humidity, DIN EN 60068-3-4: 2002 ..... 98 %, non condensing
Protection class, DIN EN 60529: 1991 [2] ..... IP 67

[2] valid with screwed on mating connector and / or screwed together cable gland

Dimension drawing

(For project planning please request customized dimensional drawing!)

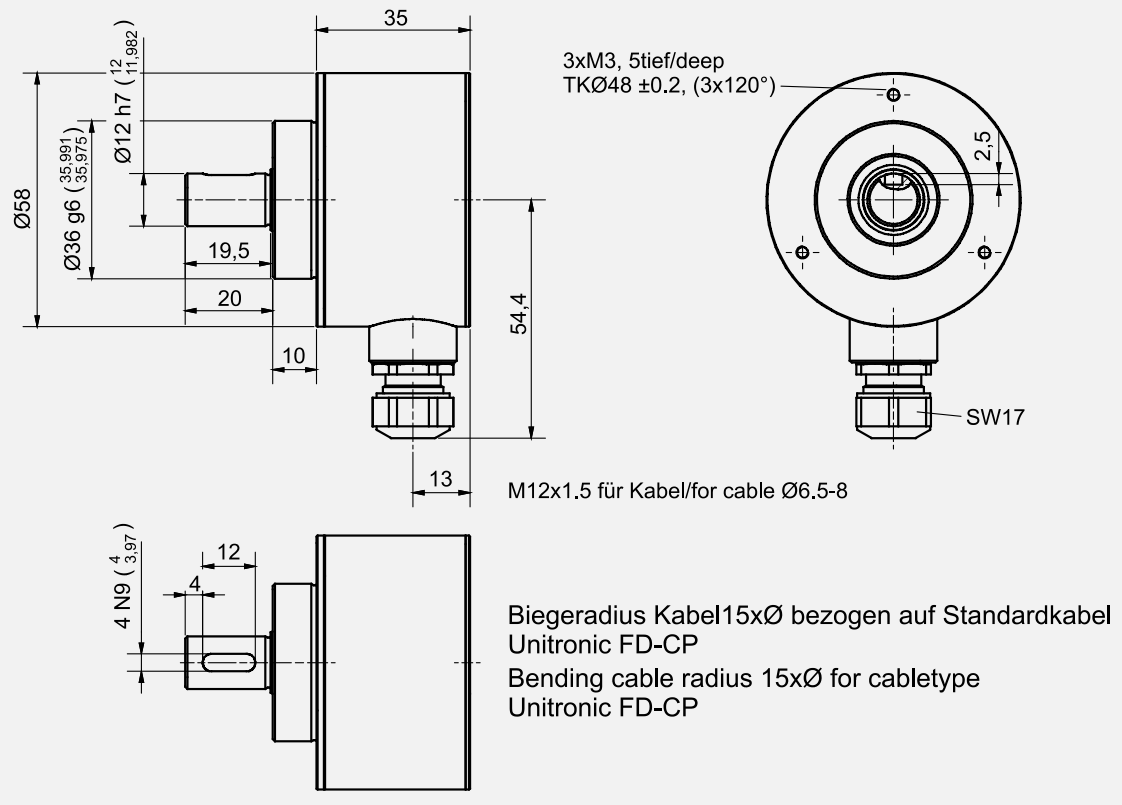

TR-Electronic GmbH
Eglishalde 6
78647 Trossingen
Tel. +49 7425 228-0
info@tr-electronic.de

Incremental-Encoder IEH 110

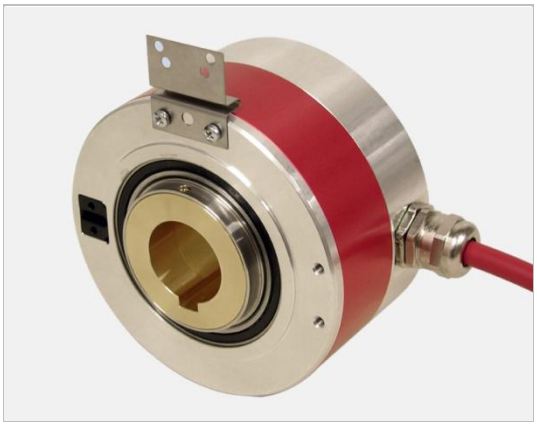

+ Incremental interface
+ Type with hollow through shaft
+ Shaft diameter 30…50 mm
+ Parameter setting possibilities
+ Special parameters upon request

Characteristics

Supply voltage	11…27 VDC, optional 5 VDC ±5%
Current consumption without load	< 110 mA, < 150 mA at 5 VDC
Number of pulses/revolution [1]	≥ 2…≤ 8.192
Version with push-pull	
- Output level	11…27 VDC, supply voltage
- Output current	≤ 30 mA
- Output frequency	150 kHz, ±15°
- Supply voltage	11…27 V DC
Version with line driver	
- Output level	5 VDC, RS422
- Output current	≤ 50 mA
- Output frequency	300 kHz, ±15°
- Supply voltage	11…27 V DC, optional 5 VDC
Incremental signals	A+, A–, B+, B–
Zero pulse	Ref+, Ref–
Mechanically permissible speed	≤ 2.000 min^{-1}
Shaft load	Own mass
Bearing life time	≥ 3.9 * 10^{10} revolutions at
- Speed	≤ 2.000 min^{-1}
- Operating temperature	≤ 60 °C
Shaft diameter in mm	30H7 with groove…50H7 without groove
Permissible angular acceleration	≤ 10^4 rad/s^2
Moment of inertia	typically 525 * 10^{-6} kg m^2
Start-up torque at 20°C	typically 8 Ncm
Mass	typically 1.75 kg

[1] programmable parameter

TR-Electronic GmbH
Eglishalde 6
78647 Trossingen
Tel. +49 7425 228-0
info@tr-electronic.de

Environmental conditions

Vibration, DIN EN 60068-2-6: 1996 ..... ≤ 100 m/s², sine 50-2000 Hz
Shock, DIN EN 60068-2-27: 1995..... ≤ 1000 m/s², half-sine 11ms
EMC
- Transient emissions, DIN EN 61000-6-3: 2007
- Immunity to disturbance, DIN EN 61000-6-2: 2006

Working temperature ..... 0 °C…+60 °C, optional -20 °C…+70 °C
Storage temperature ..... -30 °C…+80 °C, dry
Relative humidity, DIN EN 60068-3-4: 2002 ..... 98 %, non condensing
Protection class, DIN EN 60529: 1991 [2] ..... IP 54

[2] valid with screwed on mating connector and / or screwed together cable gland

Dimension drawing

(For project planning please request customized dimensional drawing!)

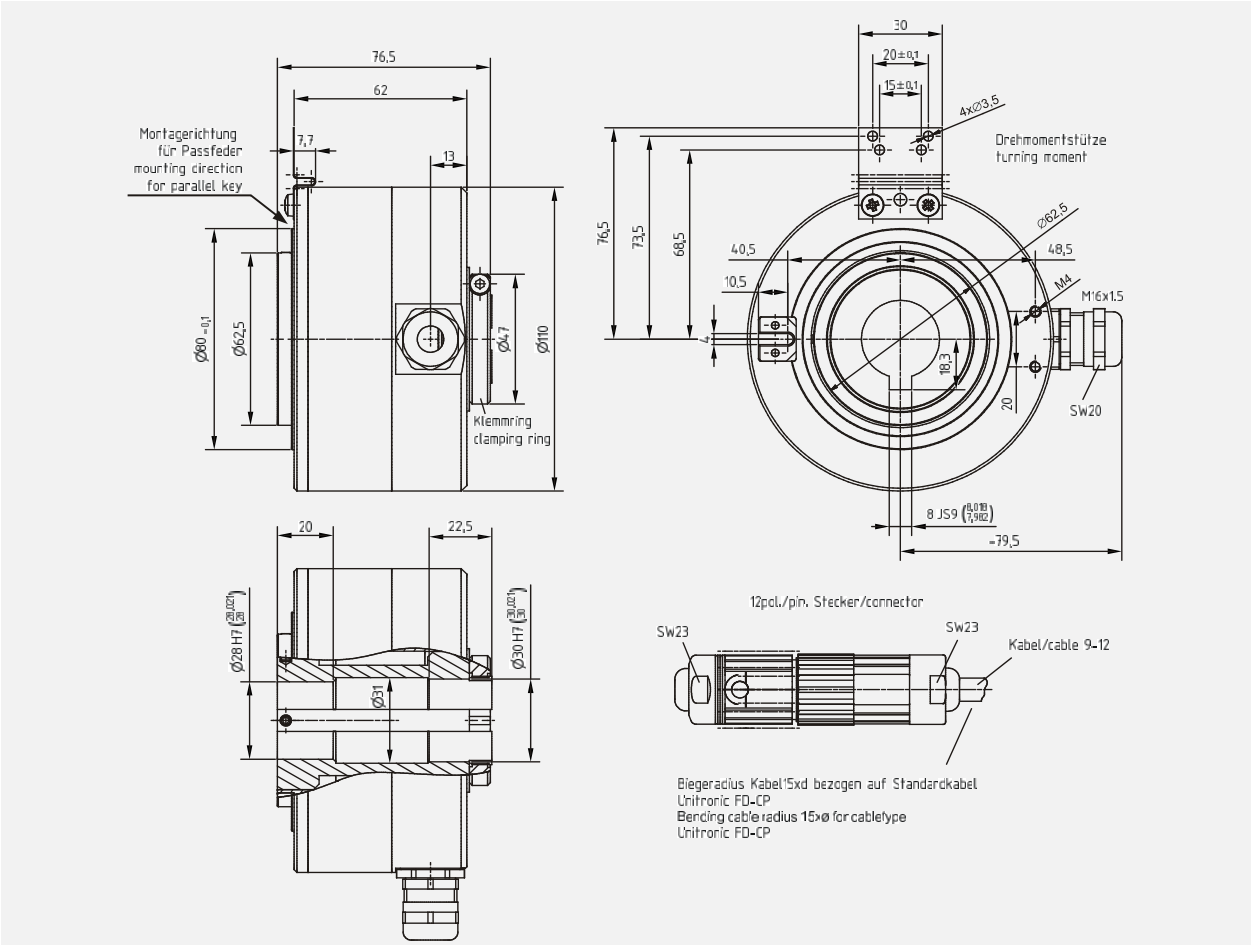

TR-Electronic GmbH
Eglishalde 6
78647 Trossingen
Tel. +49 7425 228-0
info@tr-electronic.de

Inkremental-Encoder IDV 58

+ 2-fach Inkremental Schnittstelle
+ Ausführung mit Vollwelle
+ Breites modulares Produktspektrum
+ Redundantes Abtastungs-System
+ Umfangreiche Parametrierungsmöglichkeiten
+ Sonderparameter auf Anfrage
+ Weitere Schnittstellen - Kombinationen auf Anfrage
+ Modularer Aufbau für mechanische Anpassungen

Kenndaten

Versorgungsspannung ..... 2 * 11…28 VDC, optional 2 * 5 VDC ± 5 %, oder kombiniert
Stromaufnahme ohne Last ..... < 130 mA, < 160 mA bei 5VDC, < 145 mA

Impulszahl/Umdrehung [1] ..... ≥ 2…≤ 1.024, > 1.024: 2.048, 4.096, 8.192

Version mit Gegentakt
- Ausgangspegel ..... 11…28 VDC, Versorgungsspannung
- Ausgangsstrom ..... ≤ 30 mA
- Ausgangsfrequenz ..... 150 kHz, ± 15°
- Versorgungsspannung ..... 11…28 V DC

Version mit Kabelsender
- Ausgangspegel ..... 5 VDC, RS422
- Ausgangsstrom ..... ≤ 50 mA
- Ausgangsfrequenz ..... 300 kHz, ± 15°
- Versorgungsspannung ..... 11…28 V DC, optional 5 VDC

Inkrementalsignale ..... A+, A–, B+, B–
Nullimpuls ..... Ref+, Ref–
Programmierbare Parameter
- Anzahl Impulse
- Phasenlage: A / B, Nullimpuls(e)
- Nullimpuls: Impuls-Länge, Anzahl Impulse
- Freigabe/Sperrung für Preset-Funktion, Set Ref+, Ref–

Preset ..... elektronische Justage der Referenzsignale Ref+, Ref–
Logischer Zustand ..... „0" < + 2 VDC, „1" = Versorgungsspannung

Mechanisch zulässige Drehzahl ..... ≤ 6.000 min^{-1}
Wellenbelastung, am Wellenende ..... ≤ 10 N axial, ≤ 20 N radial
Lagerlebensdauer ..... ≥ 3,9 * 10^{10} Umdrehungen bei
- Drehzahl ..... ≤ 6.000 min^{-1}
- Betriebstemperatur ..... ≤ 60 °C
- Wellenbelastung, am Wellenende ..... ≤ 5 N axial, ≤ 10 N radial

Zulässige Winkelbeschleunigung ..... ≤ 10^4 rad/s^2
Trägheitsmoment ..... typisch 5 * 10^{-6} kg m^2
Anlaufdrehmoment bei 20 °C ..... typisch 2 Ncm
Masse ..... 0,6 kg…1 kg

[1] programmierbarer Parameter

TR-Electronic GmbH
Eglishalde 6
78647 Trossingen
Tel. +49 7425 228-0
info@tr-electronic.de

Umgebungsbedingungen

Vibration, DIN EN 60068-2-6: 1996 ..... ≤ 100 m/s², Sinus 50-2000 Hz
Schock, DIN EN 60068-2-27: 1995 ..... ≤ 1000 m/s², Halbsinus 11ms
EMV
- Störfestigkeit, DIN EN 61000-6-2: 2006
- Störaussendung, DIN EN 61000-6-3: 2007

Arbeitstemperatur ..... 0 °C…+60 °C, optional -20 °C…+70 °C
Lagertemperatur ..... -30 °C…+80 °C, trocken
Relative Luftfeuchte, DIN EN 60068-3-4: 2002 ..... 98 %, keine Betauung
Schutzart, DIN EN 60529: 1991 [2] ..... IP 65

[2] gültig mit aufgeschraubtem Gegenstecker und/oder verschraubter Kabelverschraubung

Maßzeichnung

(Für die Projektierung kundenspezifische Maßzeichnung anfordern!)

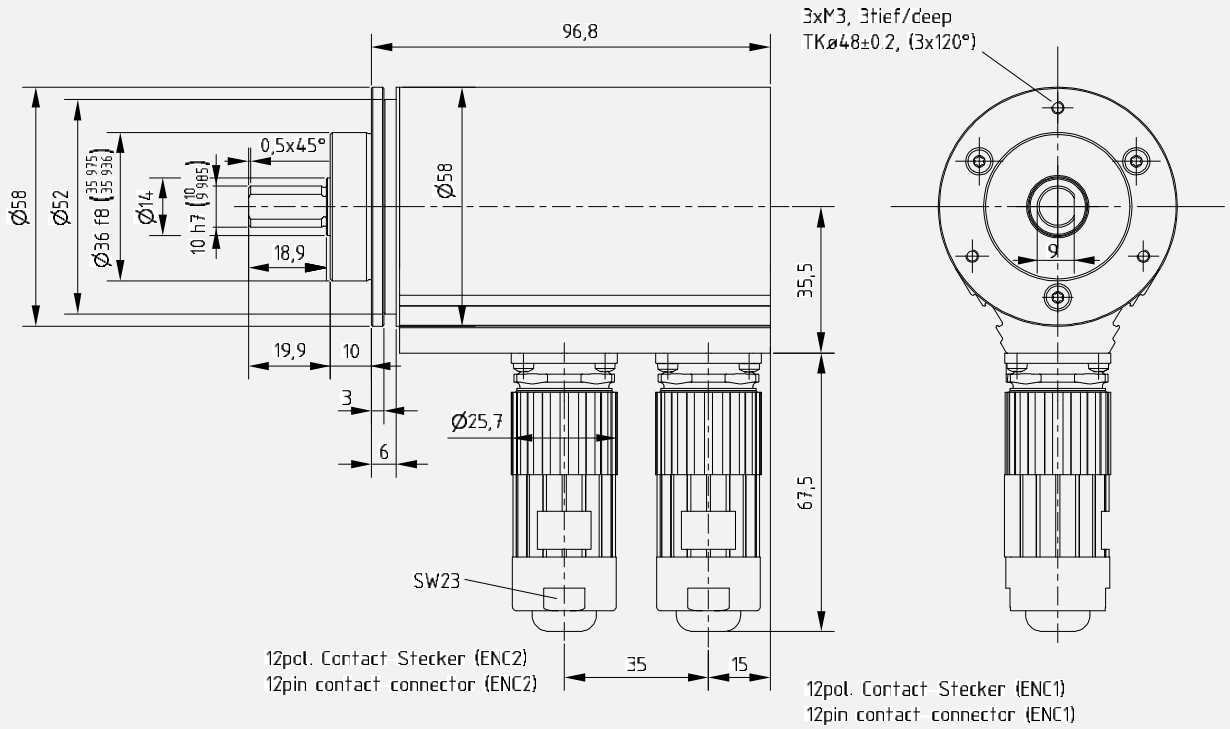

TR-Electronic GmbH
Eglishalde 6
78647 Trossingen
Tel. +49 7425 228-0
info@tr-electronic.de

Incremental-Encoder IDS 58

+ Double Incremental interface
+ Type with blind shaft
+ Modular product line
+ Redundant scanning system
+ Extensive parameter setting possibilities
+ Special parameters upon request
+ Further interface variants upon request
+ Modular construction for mechanical customizations

Characteristics

Supply voltage ..... 2 * 11…28 VDC, optional 2 * 5 VDC ±5%, or combined
Current consumption without load ..... < 130 mA, < 160 mA at 5VDC , < 145 mA

Number of pulses/revolution [1] ..... ≥2…≤ 1.024, >1.024: 2.048, 4.096, 8.192

Version with push-pull
- Output level ..... 11…28 VDC, supply voltage
- Output current ..... ≤ 30 mA
- Output frequency ..... 150 kHz, ±15°
- Supply voltage ..... 11…28 V DC

Version with line driver
- Output level ..... 5 VDC, RS422
- Output current ..... ≤ 50 mA
- Output frequency ..... 300 kHz, ±15°
- Supply voltage ..... 11…28 V DC, optional 5 VDC

Incremental signals ..... A+, A–, B+, B–
Zero pulse ..... Ref+, Ref–
Programmable parameters
- Number of pulses
- Phase position: A / B, Zero pulse(s)
- Zero pulse: Pulse length, Number of pulses
- Enable/Disable Preset function, Set Ref+, Ref–

Preset ..... electronic adjustment of the reference signals Ref+, Ref–
Logic level ..... "0" < + 2 VDC, "1" = Supply voltage

Mechanically permissible speed ..... ≤ 6.000 min^{-1}
Shaft load ..... Own mass
Bearing life time ..... ≥ 3.9 * 10^{10} revolutions at
- Speed ..... ≤ 6.000 min^{-1}
- Operating temperature ..... ≤ 60 °C

Shaft diameter in mm 10H7, 12H7
Permissible angular acceleration ..... ≤ 10^4 rad/s^2
Moment of inertia ..... typically 5 * 10^{-6} kg m^2
Start-up torque at 20°C ..... typically 2 Ncm
Mass ..... 0.6 kg…1 kg

[1] programmable parameter

TR-Electronic GmbH
Eglishalde 6
78647 Trossingen
Tel. +49 7425 228-0
info@tr-electronic.de

Environmental conditions

Vibration, DIN EN 60068-2-6: 1996 ..... ≤ 100 m/s², sine 50-2000 Hz
Shock, DIN EN 60068-2-27: 1995..... ≤ 1000 m/s², half-sine 11ms
EMC
- Immunity to disturbance, DIN EN 61000-6-2: 2006
- Transient emissions, DIN EN 61000-6-3: 2007

Working temperature ..... 0 °C…+60 °C, optional -20 °C…+70 °C
Storage temperature ..... -30 °C…+80 °C, dry
Relative humidity, DIN EN 60068-3-4: 2002 ..... 98 %, non condensing
Protection class, DIN EN 60529: 1991 [2] ..... IP 65

[2] valid with screwed on mating connector and / or screwed together cable gland

Dimension drawing

(For project planning please request customized dimensional drawing!)

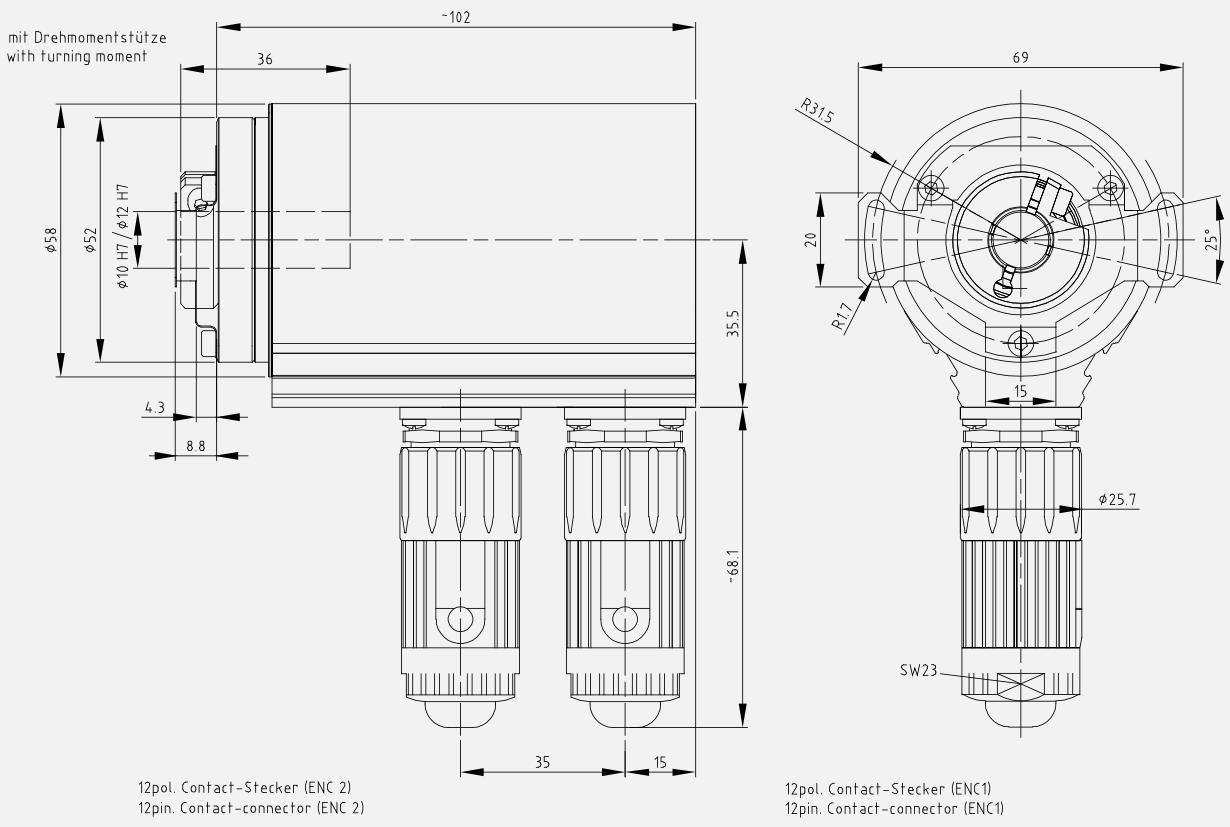

TR-Electronic GmbH
Eglishalde 6
78647 Trossingen
Tel. +49 7425 228-0
info@tr-electronic.de

Incremental-Encoder IOV 58

+ Incremental interface
+ Type with solid shaft
+ Modular product line
+ Extensive parameter setting possibilities
+ Special parameters upon request
+ Number of pulses up to 36.000
+ Modular construction for mechanical customizations

Characteristics

Supply voltage ..... 11…28 VDC, optional 5 VDC ±5%
Current consumption without load ..... < 65 mA, < 80 mA at 5 VDC

Number of pulses/revolution [1] ..... ≤ 36.000

Version with push-pull
- Output level ..... 11…28 VDC, supply voltage
- Output current ..... ≤ 30 mA
- Output frequency ..... 150 kHz, ±15°
- Supply voltage ..... 11…28 V DC

Version with line driver
- Output level ..... 5 VDC, RS422
- Output current ..... ≤ 50 mA
- Output frequency ..... 300 kHz, ±15°
- Supply voltage ..... 11…28 V DC, optional 5 VDC

Incremental signals ..... A+, A–, B+, B–
Zero pulse ..... Ref+, Ref–
Programmable parameters
- Number of pulses
- Overspeed
- Enable/Disable Preset function, Set Ref+, Ref–

Preset ..... electronic adjustment of the reference signals Ref+, Ref–
Logic level ..... "0" < + 2 VDC, "1" = Supply voltage

Mechanically permissible speed ..... ≤ 12.000 min^{-1}
Shaft load, at the shaft end ..... ≤ 10 N axial, ≤ 20 N radial
Bearing life time ..... ≥ 3.9 * 10^{10} revolutions at
- Speed ..... ≤ 6.000 min^{-1}
- Operating temperature ..... ≤ 60 °C
- Shaft load, at the shaft end ..... ≤ 5 N axial, ≤ 10 N radial

Permissible angular acceleration ..... ≤ 10^4 rad/s^2
Moment of inertia ..... typically 2.5 * 10^{-6} kg m^2
Start-up torque at 20°C ..... typically 2 Ncm
Mass ..... 0.3 kg…0.5 kg

[1] programmable parameter

TR-Electronic GmbH
Eglishalde 6
78647 Trossingen
Tel. +49 7425 228-0
info@tr-electronic.de

Environmental conditions

Vibration, DIN EN 60068-2-6: 1996 ..... ≤ 100 m/s², sine 50-2000 Hz
Shock, DIN EN 60068-2-27: 1995..... ≤ 1000 m/s², half-sine 11ms
EMC
- Immunity to disturbance, DIN EN 61000-6-2: 2006
- Transient emissions, DIN EN 61000-6-3: 2007

Working temperature ..... 0 °C…+60 °C, optional -20 °C…+70 °C
Storage temperature ..... -30 °C…+80 °C, dry
Relative humidity, DIN EN 60068-3-4: 2002 ..... 98 %, non condensing
Protection class, DIN EN 60529: 1991 [2)] ..... IP 65

[2)] valid with screwed on mating connector and / or screwed together cable gland

Dimension drawing

(For project planning please request customized dimensional drawing!)

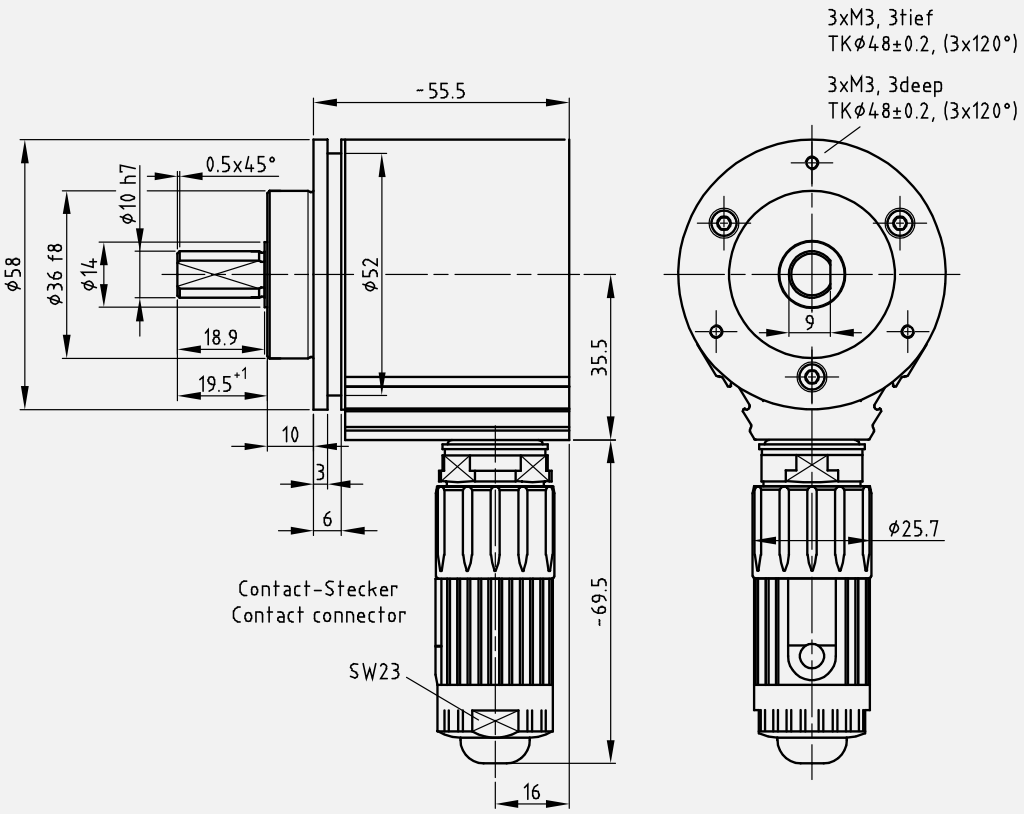

TR-Electronic GmbH
Eglishalde 6
78647 Trossingen
Tel. +49 7425 228-0
info@tr-electronic.de

Incremental-Encoder IOH 58

+ Incremental interface
+ Type with hollow through shaft
+ Modular product line
+ Extensive parameter setting possibilities
+ Special parameters upon request
+ Number of pulses up to 36.000
+ Modular construction for mechanical customizations

Characteristics

Supply voltage ..... 11…28 VDC, optional 5 VDC ±5%
Current consumption without load ..... < 65 mA, < 80 mA at 5 VDC

Number of pulses/revolution [1] ..... ≤ 36.000

Version with push-pull
- Output level ..... 11…28 VDC, supply voltage
- Output current ..... ≤ 30 mA
- Output frequency ..... 150 kHz, ±15°
- Supply voltage ..... 11…28 V DC

Version with line driver
- Output level ..... 5 VDC, RS422
- Output current ..... ≤ 50 mA
- Output frequency ..... 300 kHz, ±15°
- Supply voltage ..... 11…28 V DC, optional 5 VDC

Incremental signals ..... A+, A–, B+, B–
Zero pulse ..... Ref+, Ref–
Programmable parameters
- Number of pulses
- Overspeed
- Enable/Disable Preset function, Set Ref+, Ref–

Preset ..... electronic adjustment of the reference signals Ref+, Ref–
Logic level ..... "0" < + 2 VDC, "1" = Supply voltage

Mechanically permissible speed ..... ≤ 6.000 min^{-1}
Shaft load ..... Own mass
Bearing life time ..... ≥ 3.9 * 10^{10} revolutions at
- Speed ..... ≤ 6.000 min^{-1}
- Operating temperature ..... ≤ 60 °C

Shaft diameter in mm 8H7, 10H7, 12H7
Permissible angular acceleration ..... ≤ 10^4 rad/s^2
Moment of inertia ..... typically 2.5 * 10^{-6} kg m^2
Start-up torque at 20°C ..... typically 3.7 Ncm
Mass ..... 0.3 kg…0.5 kg

[1] programmable parameter

TR-Electronic GmbH
Eglishalde 6
78647 Trossingen
Tel. +49 7425 228-0
info@tr-electronic.de

Environmental conditions

Vibration, DIN EN 60068-2-6: 1996 ..... ≤ 100 m/s², sine 50-2000 Hz
Shock, DIN EN 60068-2-27: 1995..... ≤ 1000 m/s², half-sine 11ms
EMC
- Immunity to disturbance, DIN EN 61000-6-2: 2006
- Transient emissions, DIN EN 61000-6-3: 2007

Working temperature ..... 0 °C…+60 °C, optional -20 °C…+70 °C
Storage temperature ..... -30 °C…+80 °C, dry
Relative humidity, DIN EN 60068-3-4: 2002 ..... 98 %, non condensing
Protection class, DIN EN 60529: 1991 [2] ..... IP 54

[2] valid with screwed on mating connector and / or screwed together cable gland

Dimension drawing

(For project planning please request customized dimensional drawing!)

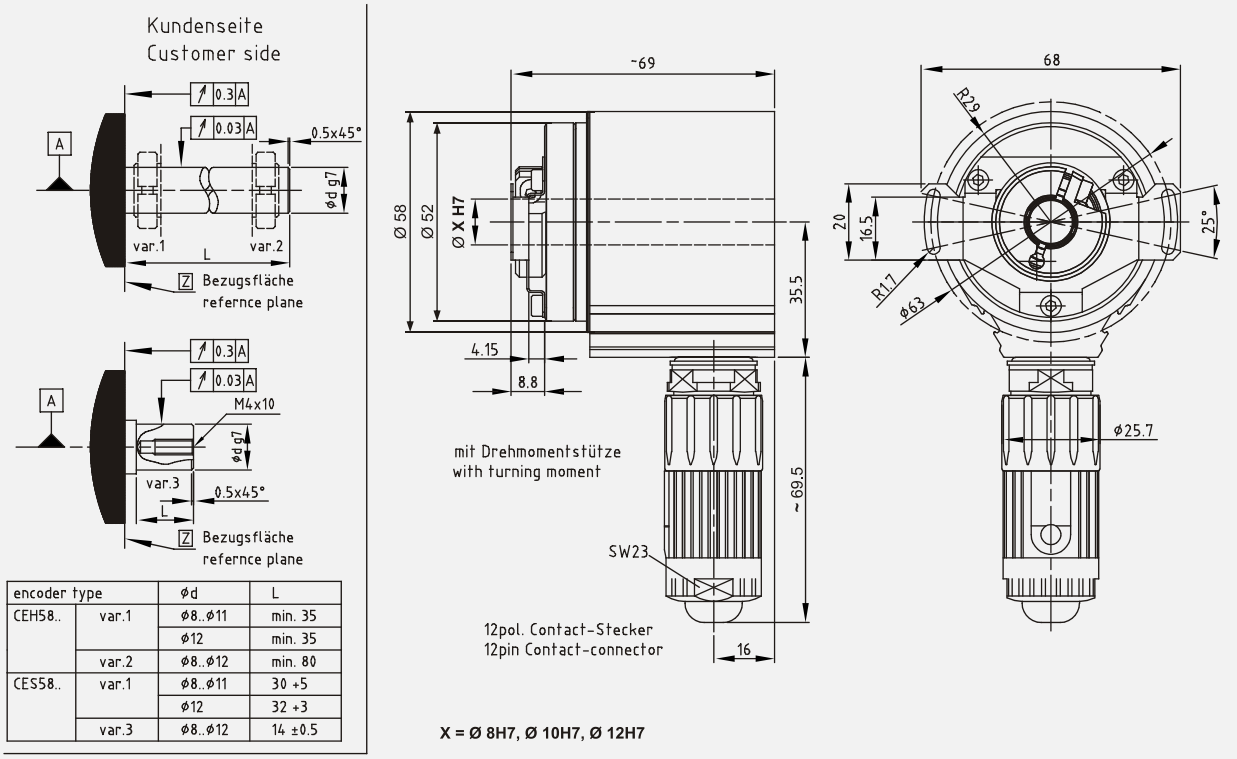

encoder type		ød	L
CEH58..	var.1	ø8..ø11	min. 35
		ø12	min. 35
	var.2	ø8..ø12	min. 80
CES58..	var.1	ø8..ø11	30 +5
		ø12	32 +3
	var.3	ø8..ø12	14 ±0.5

TR-Electronic GmbH
Eglishalde 6
78647 Trossingen
Tel. +49 7425 228-0
info@tr-electronic.de

Incremental-Encoder IOS 58

+ Incremental interface
+ Type with blind shaft
+ Modular product line
+ Extensive parameter setting possibilities
+ Special parameters upon request
+ Number of pulses up to 36.000
+ Modular construction for mechanical customizations

Characteristics

Supply voltage ..... 11…28 VDC, optional 5 VDC ±5%
Current consumption without load ..... < 65 mA, < 80 mA at 5 VDC

Number of pulses/revolution [1] ..... ≤ 36.000

Version with push-pull
- Output level ..... 11…28 VDC, supply voltage
- Output current ..... ≤ 30 mA
- Output frequency ..... 150 kHz, ±15°
- Supply voltage ..... 11…28 V DC

Version with line driver
- Output level ..... 5 VDC, RS422
- Output current ..... ≤ 50 mA
- Output frequency ..... 300 kHz, ±15°
- Supply voltage ..... 11…28 V DC, optional 5 VDC

Incremental signals ..... A+, A–, B+, B–
Zero pulse ..... Ref+, Ref–
Programmable parameters
- Number of pulses
- Overspeed
- Enable/Disable Preset function, Set Ref+, Ref–

Preset ..... electronic adjustment of the reference signals Ref+, Ref–
Logic level ..... "0" < + 2 VDC, "1" = Supply voltage

Mechanically permissible speed ..... ≤ 12.000 min^{-1}
Shaft load ..... Own mass
Bearing life time ..... ≥ 3.9 * 10^{10} revolutions at
- Speed ..... ≤ 6.000 min^{-1}
- Operating temperature ..... ≤ 60 °C

Shaft diameter in mm 8H7, 10H7, 12H7
Permissible angular acceleration ..... ≤ 10^4 rad/s^2
Moment of inertia ..... typically 2.5 * 10^{-6} kg m^2
Start-up torque at 20°C ..... typically 2 Ncm
Mass ..... 0.3 kg…0.5 kg

[1] programmable parameter

TR-Electronic GmbH
Eglishalde 6
78647 Trossingen
Tel. +49 7425 228-0
info@tr-electronic.de

Environmental conditions

Vibration, DIN EN 60068-2-6: 1996 ..... ≤ 100 m/s², sine 50-2000 Hz
Shock, DIN EN 60068-2-27: 1995..... ≤ 1000 m/s², half-sine 11ms
EMC
- Immunity to disturbance, DIN EN 61000-6-2: 2006
- Transient emissions, DIN EN 61000-6-3: 2007

Working temperature ..... 0 °C…+60 °C, optional -20 °C…+70 °C
Storage temperature ..... -30 °C…+80 °C, dry
Relative humidity, DIN EN 60068-3-4: 2002 ..... 98 %, non condensing
Protection class, DIN EN 60529: 1991 [2] ..... IP 65

[2] valid with screwed on mating connector and / or screwed together cable gland

Dimension drawing

(For project planning please request customized dimensional drawing!)

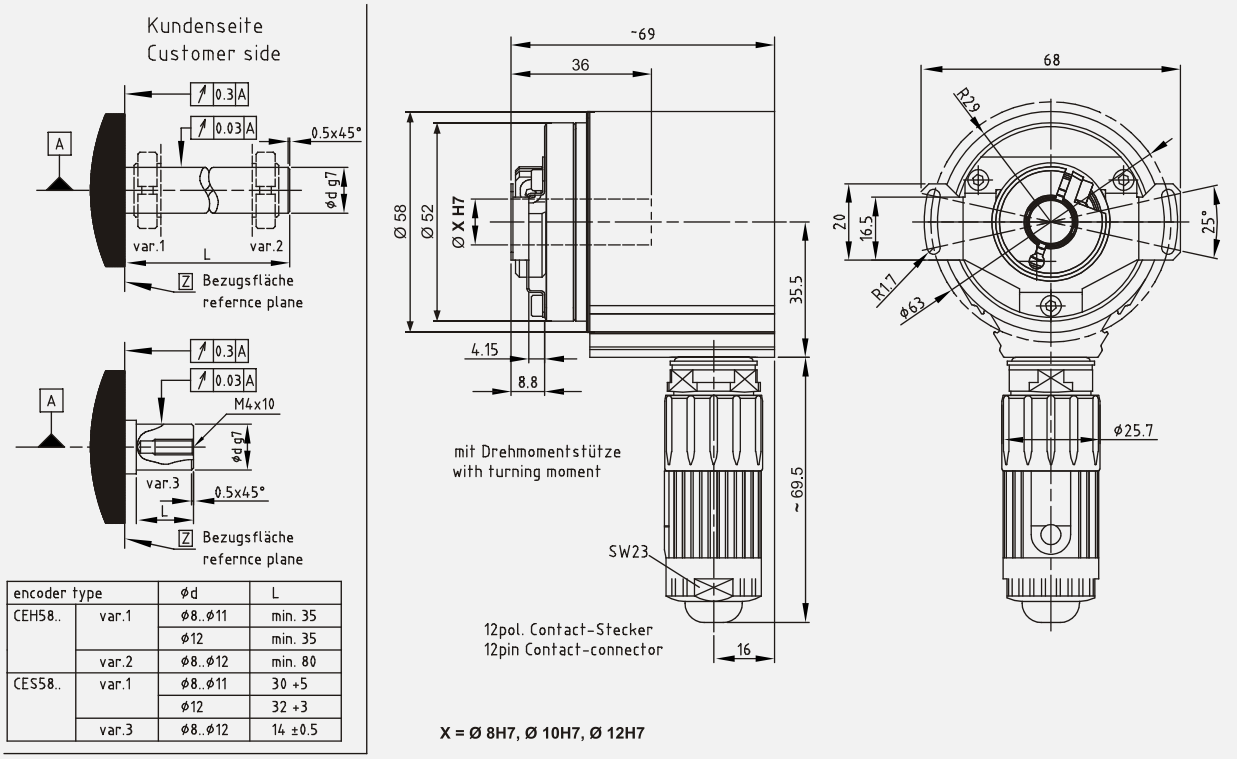

encoder type		ød	L
CEH58..	var.1	ø8..ø11	min. 35
		ø12	min. 35
	var.2	ø8..ø12	min. 80
CES58..	var.1	ø8..ø11	30 +5
		ø12	32 +3
	var.3	ø8..ø12	14 ±0.5

TR-Electronic GmbH
Eglishalde 6
78647 Trossingen
Tel. +49 7425 228-0
info@tr-electronic.de

Incremental-Encoder IOH 110

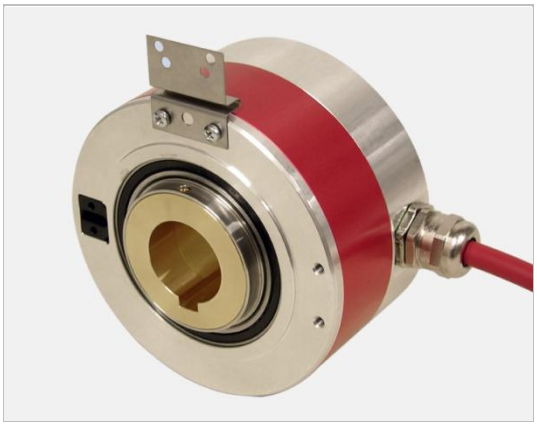

+ Incremental interface
+ Type with hollow through shaft
+ Shaft diameter 30…50 mm
+ Parameter setting possibilities
+ Special parameters upon request
+ Number of pulses up to 36.000

Characteristics

Supply voltage	11…27 VDC, optional 5 VDC ±5%
Current consumption without load	< 110 mA, < 150 mA at 5 VDC
Number of pulses/revolution [1]	≥ 2…≤ 36.000
Version with push-pull	
- Output level	11…27 VDC, supply voltage
- Output current	≤ 30 mA
- Output frequency	150 kHz, ±15°
- Supply voltage	11…27 V DC
Version with line driver	
- Output level	5 VDC, RS422
- Output current	≤ 50 mA
- Output frequency	300 kHz, ±15°
- Supply voltage	11…27 V DC, optional 5 VDC
Incremental signals	A+, A–, B+, B–
Zero pulse	Ref+, Ref–
Mechanically permissible speed	≤ 2.000 min^{-1}
Shaft load	Own mass
Bearing life time	≥ 3.9 * 10^{10} revolutions at
- Speed	≤ 2.000 min^{-1}
- Operating temperature	≤ 60 °C
Shaft diameter in mm	30H7 with groove…50H7 without groove
Permissible angular acceleration	≤ 10^4 rad/s^2
Moment of inertia	typically 525 * 10^{-6} kg m^2
Start-up torque at 20°C	typically 8 Ncm
Mass	typically 1.75 kg

[1] programmable parameter

TR-Electronic GmbH
Eglishalde 6
78647 Trossingen
Tel. +49 7425 228-0
info@tr-electronic.de

Environmental conditions

Vibration, DIN EN 60068-2-6: 1996 ..... ≤ 100 m/s², sine 50-2000 Hz
Shock, DIN EN 60068-2-27: 1995..... ≤ 1000 m/s², half-sine 11ms
EMC
- Transient emissions, DIN EN 61000-6-3: 2007
- Immunity to disturbance, DIN EN 61000-6-2: 2006

Working temperature ..... 0 °C…+60 °C, optional -20 °C…+70 °C
Storage temperature ..... -30 °C…+80 °C, dry
Relative humidity, DIN EN 60068-3-4: 2002 ..... 98 %, non condensing
Protection class, DIN EN 60529: 1991 [2] ..... IP 54

[2] valid with screwed on mating connector and / or screwed together cable gland

Dimension drawing

(For project planning please request customized dimensional drawing!)

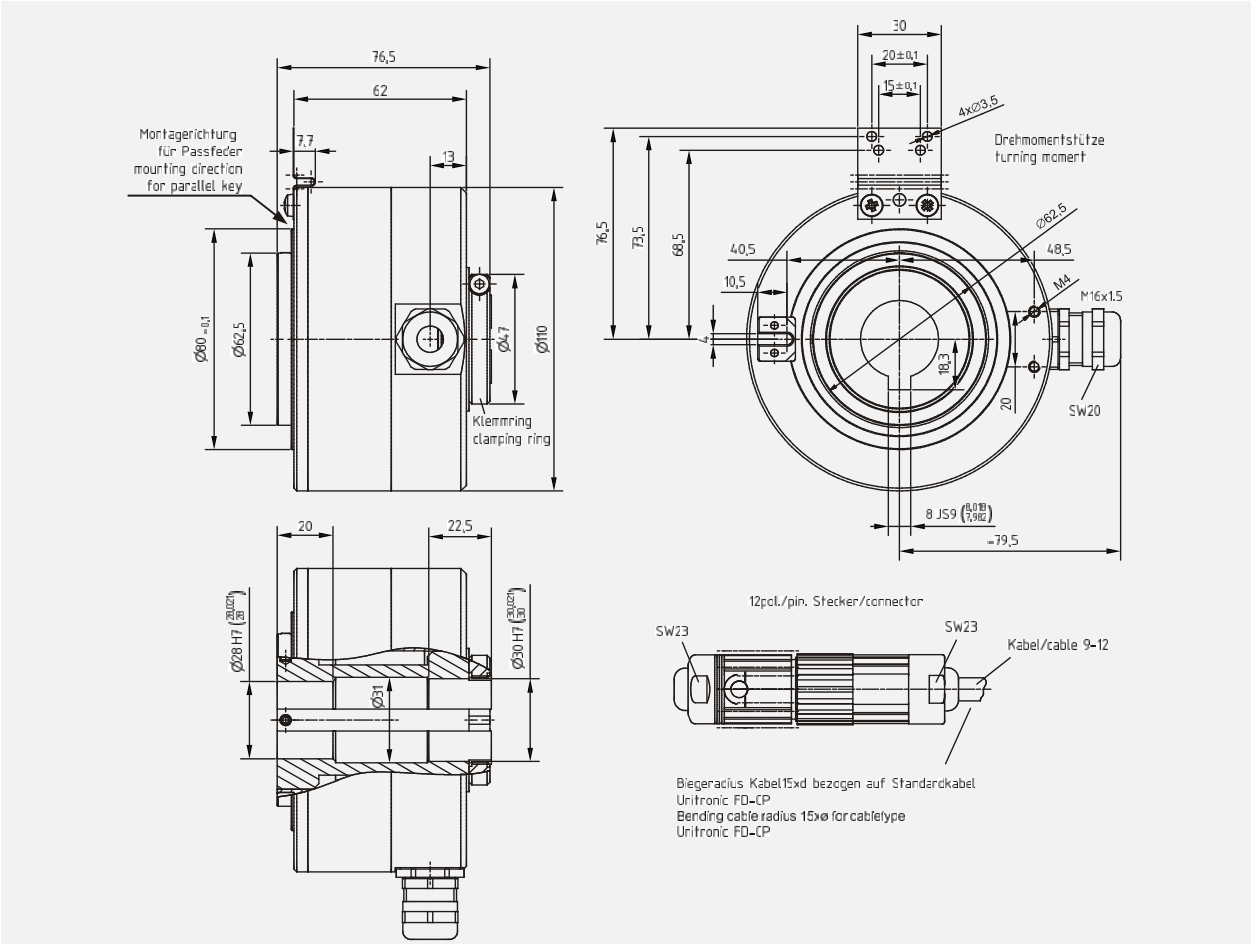

TR-Electronic GmbH
Eglishalde 6
78647 Trossingen
Tel. +49 7425 228-0
info@tr-electronic.de